

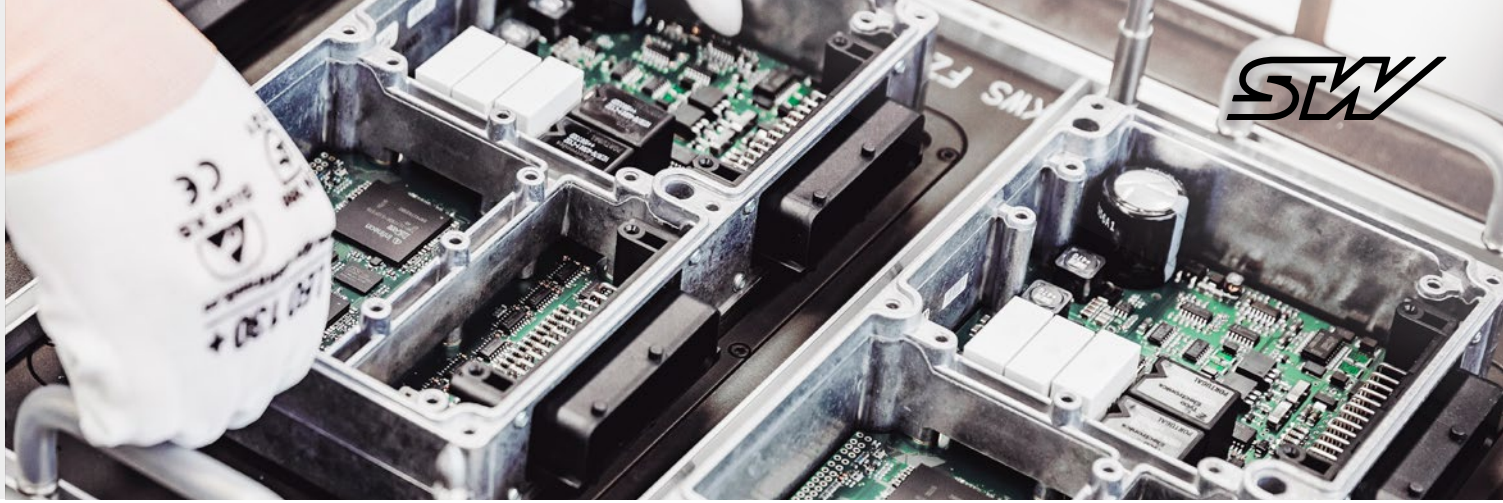

ESX-IOX

ESX I/O modules

KEY FEATURES

- Control specially designed for use in harsh mobile applications
- Predefined variants
- CANopen

TECHNICAL DATA

- 8 bit Microcontroller, 16MHz
- 64 kB Flash internal
- 2 kB EEPROM
- 1 CAN interface
- 4 A motor bridge
- Option 1: 28 inputs
  Option 2: 24 inputs / 4 outputs
  Option 3: 20 inputs / 8 outputs
  Option 4: 16 inputs / 12 outputs

ACCESSORIES

- Mating plug

Sensor-Technik Wiedemann GmbH

Am Bärenwald 6
87600 Kaufbeuren

+49 8341 9505-0
info@sensor-technik.de
www.stw-mm.com

BLOCK DIAGRAM

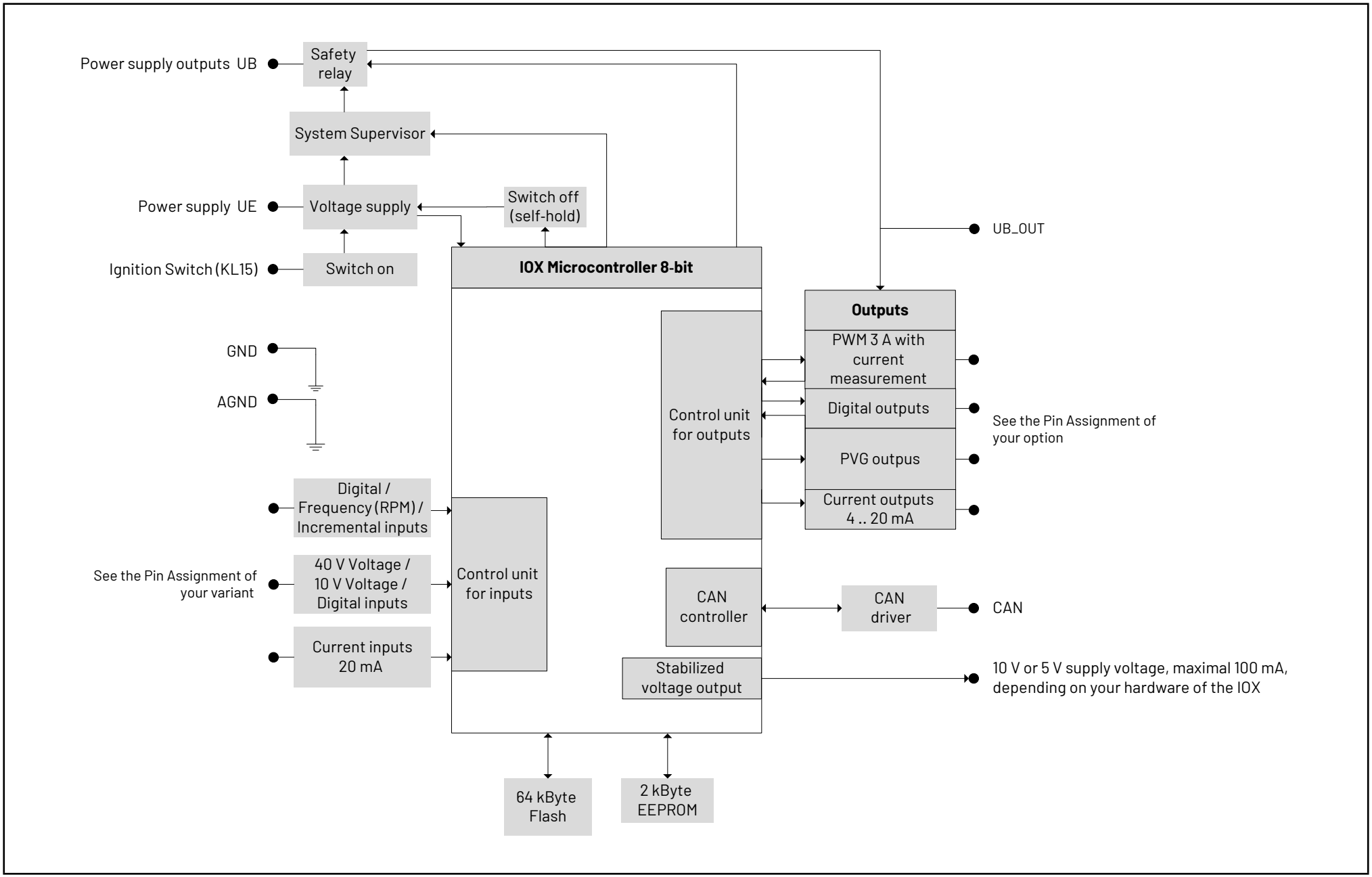

TECHNICAL DATA

Processor and memory

Type	Properties	Features
Processor	8 bit	16 MHz, System supervisor, internal watchdog
Flash	64 kB internal	
EEPROM	2 kB internal	

Communication Interfaces

Type	Max. Quantity	Configuration
CAN	1	2.0 B (11 bit and 29 bit identifier), Full CAN, Low- / High-Speed up to 1 Mbit/s
LIN	1	

Inputs (All inputs are short circuit protected)

Type	Max. Quantity	Configuration	Measurement	Options/Dependencies
Digital Inputs	20	Digital		
RPM Inputs	2	RPM	8 kHz	cut-off-frequency
Analog Inputs	12	Analog	0 ... 32 V	10 bit
	6	Analog	0 ... 10 V	10 bit
	8	Analog	4 ... 20 mA	10 bit

Outputs (All outputs are short circuit protected)

Type	Max. Quantity	Configuration	Range	Property	Features
PWM Outputs with current measurement	4	PWM	3 A	high side switch, 0 ... 100 %	Diagnosable
	opt. 4		4 A	additional low side switches	applicable as a motor bridge, diagnosable
Digital Outputs	8	Digital	4 A	high side switch	diagnosable
Stabilized voltage Output	1	Voltage	10 V		(max. load current 100 mA), stabilized supply voltage

TECHNICAL DATA

System Data

Type	Property	Values
Supply Voltage	Direct Current (DC)	9 ... 32 V
Power consumption	Without external load	100 mA
	Standby (ignition off)	1.5 mA
	Maximum load current	11 A
Temperature	Chassis Temperature	–40 °C ... +85 °C (–40 °F ... +185 °F)
Connector	Automotive Type (Tyco/AMP)	42-pole
Housing	plastic case	
Dimensions		134.5 mm x 117 mm x 36 mm
Weight		About 0.4 kg (0.88 lbs)
Degree of Protection	IP65 and IP69k	
Certificates and Compliance	Qualified to the applicable standards for automotive, agricultural and construction industries	
	CE	

TECHNICAL DRAWING

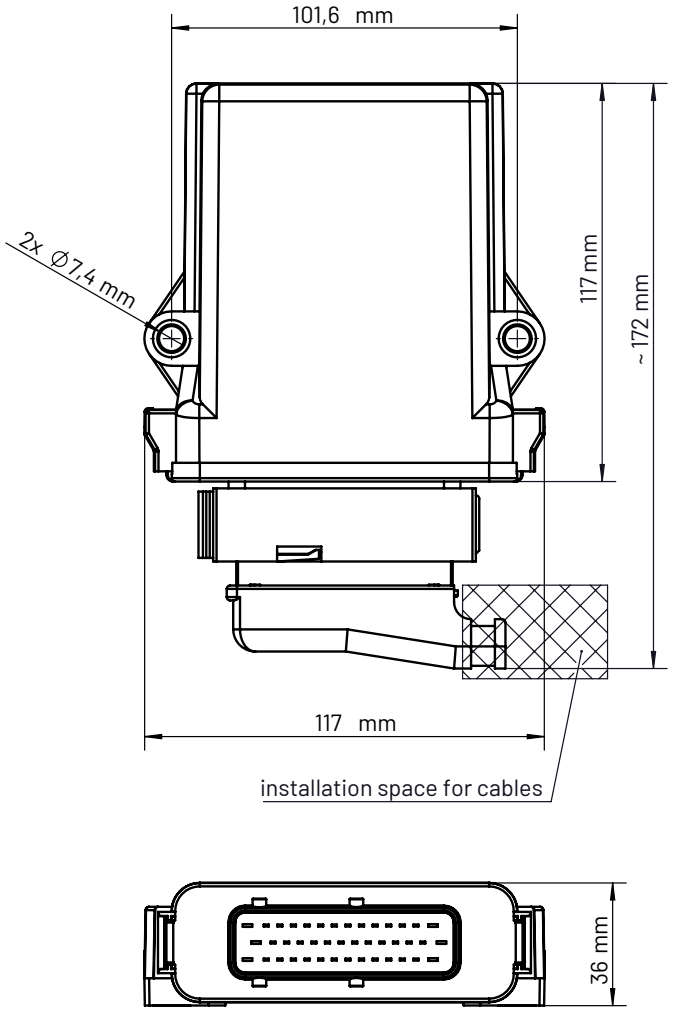

PIN ASSIGNMENT Option 1

Pin assignment sorted by pin numbers:

Pin	Description
1	GND
2	DIN23, UIN15
3	DIN24, UIN16
4	DIN25, UIN17
5	DIN26, UIN18
6	DIN18, UIN10
7	DIN17, UIN9
8	DIN16, UIN8
9	DIN15, UIN7
10	DIN22, UIN14
11	DIN21, UIN13
12	DIN20, UIN12
13	DIN19, UIN11
14	UB
15	Analog GND
16	D+
17	CAN bus low
18	RPM2, DIN28
19	UB_OUT, outputs after the internal safety relay
20	UIN2, DIN10
21	UIN4, DIN12
22	UIN6, DIN14, (COD2 encoding input for CANopen NodeID)
23	CAN bus high OUT
24	IIN2
25	IIN4
26	IIN6
27	IIN8

Pin	Description
28	UB
29	GND
30	UE
31	CAN bus high
32	+ 10 Vext (switchable) *) + 5 Vext
33	RPM1, DIN27
34	UIN1, DIN9
35	UIN3, DIN11
36	UIN5, DIN13, (COD1 encoding input for CANopen NodeID)
37	CAN bus low OUT
38	IIN1
39	IIN3
40	IIN5
41	IIN7
42	UB

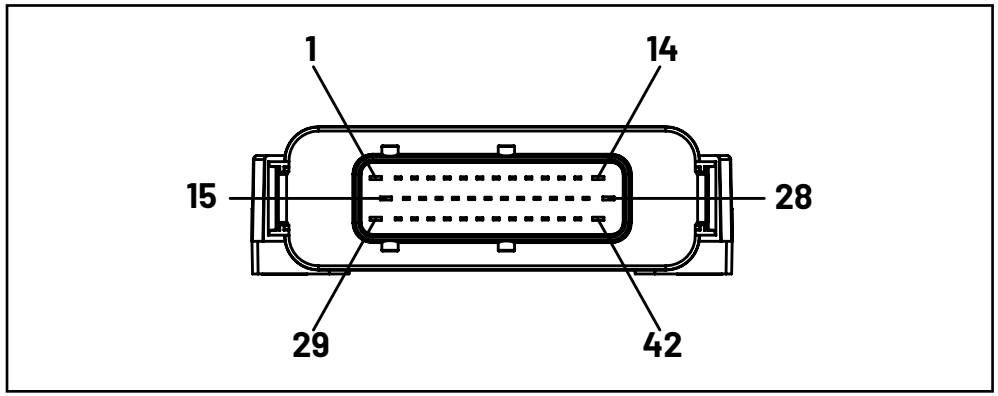

PIN ASSIGNMENT Option 2

Pin assignment sorted by pin numbers

Pin	Description
1	GND
2	DIN23, UIN15
3	DIN24, UIN16
4	DIN25, UIN17
5	DIN26, UIN18
6	OUT4, PWM4
7	OUT3, PWM3
8	OUT2, PWM2
9	OUT1, PWM1
10	DIN22, UIN14
11	DIN21, UIN13
12	DIN20, UIN12
13	DIN19, UIN11
14	UB
15	Analog GND
16	D+
17	CAN bus low
18	RPM2, DIN28
19	UB_OUT, outputs after the internal safety relay
20	UIN2, DIN10
21	UIN4, DIN12
22	UIN6, DIN14, (COD2 encoding input for CANopen NodeID)
23	CAN bus high OUT
24	IIN2
25	IIN4
26	IIN6
27	IIN8

Pin	Description
28	UB
29	GND
30	UE
31	CAN bus high
32	+ 10 Vext (switchable) *) + 5 Vext
33	RPM1, DIN27
34	UIN1, DIN9
35	UIN3, DIN11
36	UIN5, DIN13, (COD1 encoding input for CANopen NodeID)
37	CAN bus low OUT
38	IIN1
39	IIN3
40	IIN5
41	IIN7
42	UB

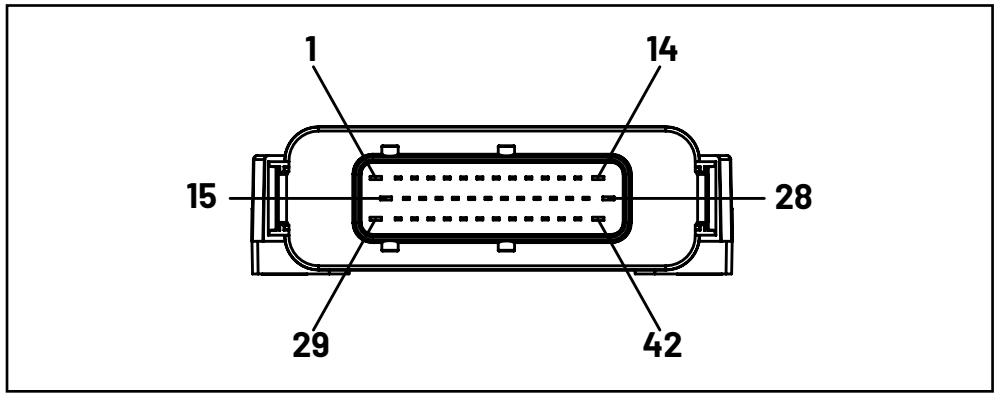

PIN ASSIGNMENT Option 3

Pin assignment sorted by pin numbers

Pin	Description
1	GND
2	DIN23, UIN15
3	DIN24, UIN16
4	DIN25, UIN17
5	DIN26, UIN18
6	OUT4, PWM4
7	OUT3, PWM3
8	OUT2, PWM2
9	OUT1, PWM1
10	OUT8
11	OUT7
12	OUT6
13	OUT5
14	UB
15	Analog GND
16	D+
17	CAN bus low
18	RPM2, DIN28
19	UB_OUT, outputs after the internal safety relay
20	UIN2, DIN10
21	UIN4, DIN12
22	UIN6, DIN14, (COD2 encoding input for CANopen NodeID)
23	CAN bus high OUT
24	IIN2
25	IIN4
26	IIN6
27	IIN8

Pin	Description
28	UB
29	GND
30	UE
31	CAN bus high
32	+ 10 Vext (switchable) *) + 5 Vext
33	RPM1, DIN27
34	UIN1, DIN9
35	UIN3, DIN11
36	UIN5, DIN13, (COD1 encoding input for CANopen NodeID)
37	CAN bus low OUT
38	IIN1
39	IIN3
40	IIN5
41	IIN7
42	UB

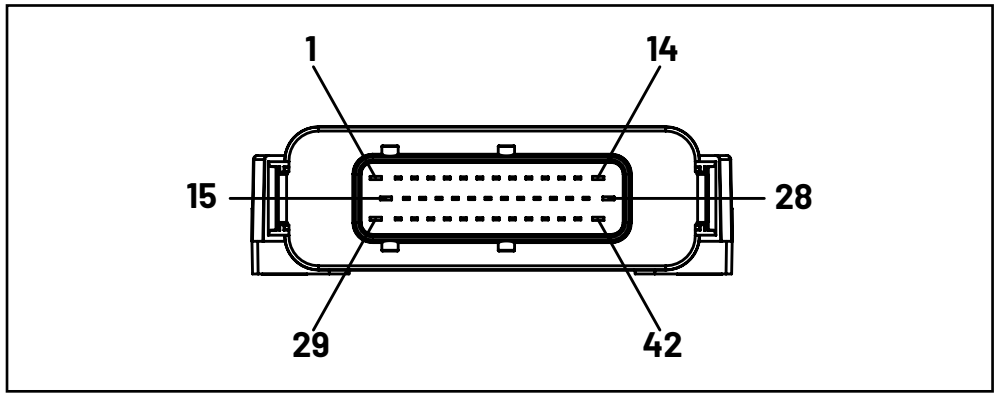

PIN ASSIGNMENT Option 4

Pin assignment sorted by pin numbers

Pin	Description
1	GND
2	OUT9
3	OUT10
4	OUT11
5	OUT12
6	OUT4, PWM4 LS
7	OUT3, PWM3 LS
8	OUT2, PWM2 LS
9	OUT1, PWM1 LS
10	OUT8
11	OUT7
12	OUT6
13	OUT5
14	UB
15	Analog GND
16	D+
17	CAN bus low
18	RPM2, DIN28
19	UB_OUT, outputs after the internal safety relay
20	UIN2, DIN10
21	UIN4, DIN12
22	UIN6, DIN14, (COD2 encoding input for CANopen NodeID)
23	CAN bus high OUT
24	IIN2
25	IIN4
26	IIN6
27	IIN8

Pin	Description
28	UB
29	GND
30	UE
31	CAN bus high
32	+ 10 Vext (switchable) *) + 5 Vext
33	RPM1, DIN27
34	UIN1, DIN9
35	UIN3, DIN11
36	UIN5, DIN13, (COD1 encoding input for CANopen NodeID)
37	CAN bus low OUT
38	IIN1
39	IIN3
40	IIN5
41	IIN7
42	UB

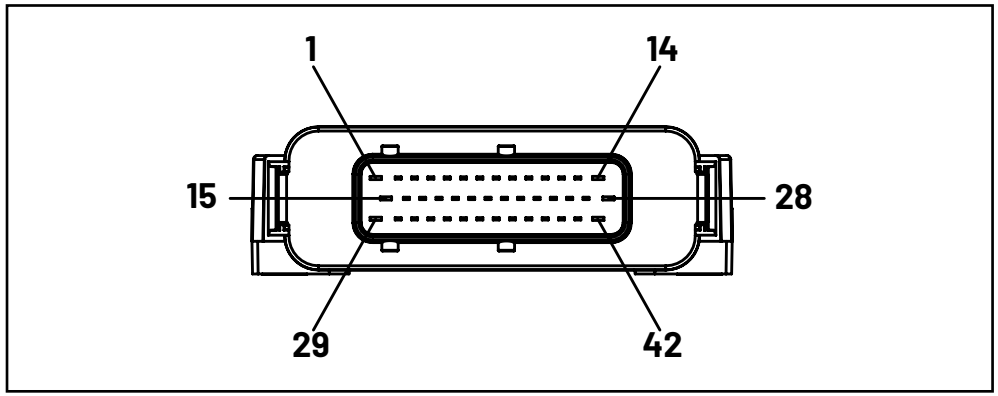

QUALIFICATION

Norm	Description
ISO/IEC 17050-1	 Conformity
94/9/EC	 Conformity (available on request, please contact your local sales representative)
KBA (Kraftfahrt-Bundesamt)	 Certification This approved device can be used on any vehicle type with the following restrictions: All vehicle types with a 12 V respectively 24 V - electrical wiring and battery(-) at the body
ISO13766	Earth-moving machinery - Electromagnetic compatibility
DIN EN 13309	Construction machinery - Electromagnetic compatibility of machines with internal power supply
DIN EN ISO 14982	Agricultural and forestry machines - Electromagnetic compatibility - Test methods and acceptance criteria
FCC, 47 CFR Part 15, Subpart B	Correspondence with FCC Docket 92-152 , Harmonisation of Rules for Digital Devices Incorporated International Standards' under terms of CISPR 22

DETAILED QUALIFICATIONS

EMC industrial (CE)	
Immunity for industrial environments - Electrostatic discharge immunity test	DIN EN 61000-6-2
Immunity for industrial environments - Radiated, radio-frequency, electromagnetic field immunity test	DIN EN 61000-6-2
Immunity for industrial environments - Electrical fast transient/burst immunity test	DIN EN 61000-6-2
Immunity for industrial environments - Surge immunity test	DIN EN 61000-6-2
Immunity to conducted disturbances, induced by radio-frequency fields	DIN EN 61000-6-2
Emission standard for industrial environments (passed class A)	DIN EN 61000-6-4

EMC Railway Applications	
Railway applications - Electromagnetic compatibility - Electrostatic discharge immunity test	EN 50121-3-2
Railway applications - Electromagnetic compatibility - Radiated, radio-frequency, electromagnetic field immunity test	EN 50121-3-2
Railway applications - Electromagnetic compatibility - Electrical fast transient/burst immunity test	EN 50121-3-2
Railway applications - Electromagnetic compatibility - Surge immunity test	EN 50121-3-2

Electrical tests	
Safety of machinery - Electrical equipment of machines -Part 1: General requirements Compliance with air and creeping distances (Covered by CAD software)	DIN EN 60204-1
Superimposed alternating voltage	ISO 16750-2

DETAILED QUALIFICATIONS

Climatic and mechanical tests	
Conditions for operational check with broadband noise Category 1, class B, from 5 Hz to 150 Hz, 3 x 10 minutes	DIN EN 61373
Simulated life time check by increased broadband noise Category 1, class B, from 5 Hz to 150 Hz, 3 x 5 hours	DIN EN 61373
Conditions for the shock test Category 1, class B, Acceleration: 30 g, time: 30 ms 6 shocks each axis, 3 axes	DIN EN 61373
Free fall	ISO 16750-3
Vibration (sinusoidal)	DIN EN 60068-2-6
Shock 50 g, 11 ms, sinus, 3 shocks/direction	DIN EN 60068-2-27
Bump Acceleration: 30 g, time: 6 ms, sinus, 1000 shocks/direction	DIN EN 60068-2-29
Tests at constant temperature 24 h at -40 °C	DIN EN 60068-2-1
Tests at constant temperature 96 h at 85 °C	DIN EN 60068-2-2
Temperature cycling test	IEC 60068-2-14, Test Nb
Temperature cycling test - rapid change of temperature	IEC 60068-2-14, Test Na
Salt spray tests - corrosion test	ISO 16750-4 IEC 60068-2-52, Test Kb
Humid heat, cyclic test - Test 1: Damp heat cyclic test	IEC 60068-2-30, Test Db, variant 1
Humid heat, cyclic test - Test 2: Composite temperature / humidity cyclic test	IEC 60068-2-38, Test Z/AD
Damp heat, steady-state test	IEC 60068-2-78
Corrosion test with flow of mixed gas	IEC 60068-2-60, Test Ke, method 4
Solar radiation	DIN EN 60068-2-5 Test

Climatic and mechanical tests	
IP code IP69k, IPx7	DIN EN 60529 ISO 20653
Condensed water	ISO 6270-2
Chemical loads	ISO 16750-5
Example of life test/statement of reliability Weibull (300 cycles from -50 °C to 125 °C, OM: 1.1	ISO 16750-1 Annex B