

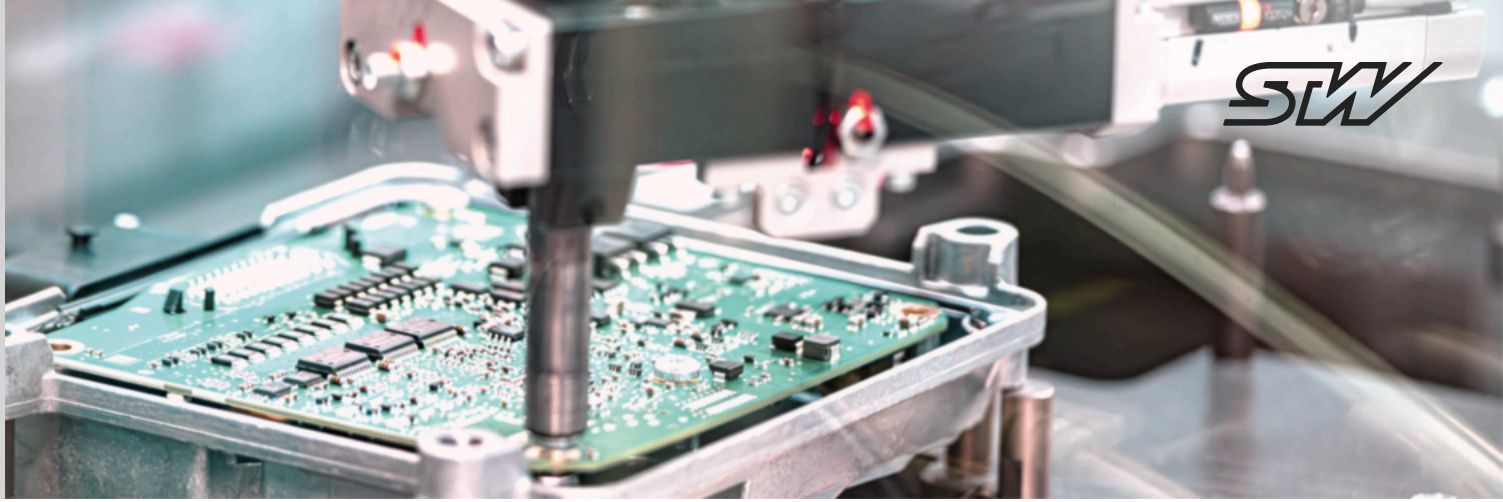

ESX.3cs

ESX control units

KEY FEATURES

- Control specially designed for use in harsh mobile applications
- Flexible programming in C, and IEC61131-3 (Neuron Power Engineer (formerly logi.CAD 3), CODESYS)
- Suitable for safety-related applications in accordance with IEC 61508:2010 (up to SIL 2) and EN ISO 13849-1:2015 (up to PL d) using C

TECHNICAL DATA

- TriCore TC 1798 32 bit, 300 MHz
- Internal: 288 kB SRAM, 4 MB Flash
- External: 8 MB SDRAM
- 32 kB EEPROM
- 2 CAN Interfaces
- Optional: Ethernet interface or Bluetooth 5.1 [1)]
- RS232 or LIN interface
- 18 inputs (SENT support)
- 17 outputs

ACCESSORIES

- Integrated into STW's openSYDE software platform
- Component deployment C, IEC61131-3 Neuron Power Engineer (formerly logi.CAD 3), CODESYS V3.5
- Mating plugs, development cables, and starter kit
- Debug variants of the controller
- Debugger
- Compiler

1) Scheduled feature

Sensor-Technik Wiedemann GmbH

Am Bärenwald 6
87600 Kaufbeuren
Germany
+49 8341 9505-0
info.stw@wiedemann-group.com
www.stw-mm.com

BLOCK DIAGRAM

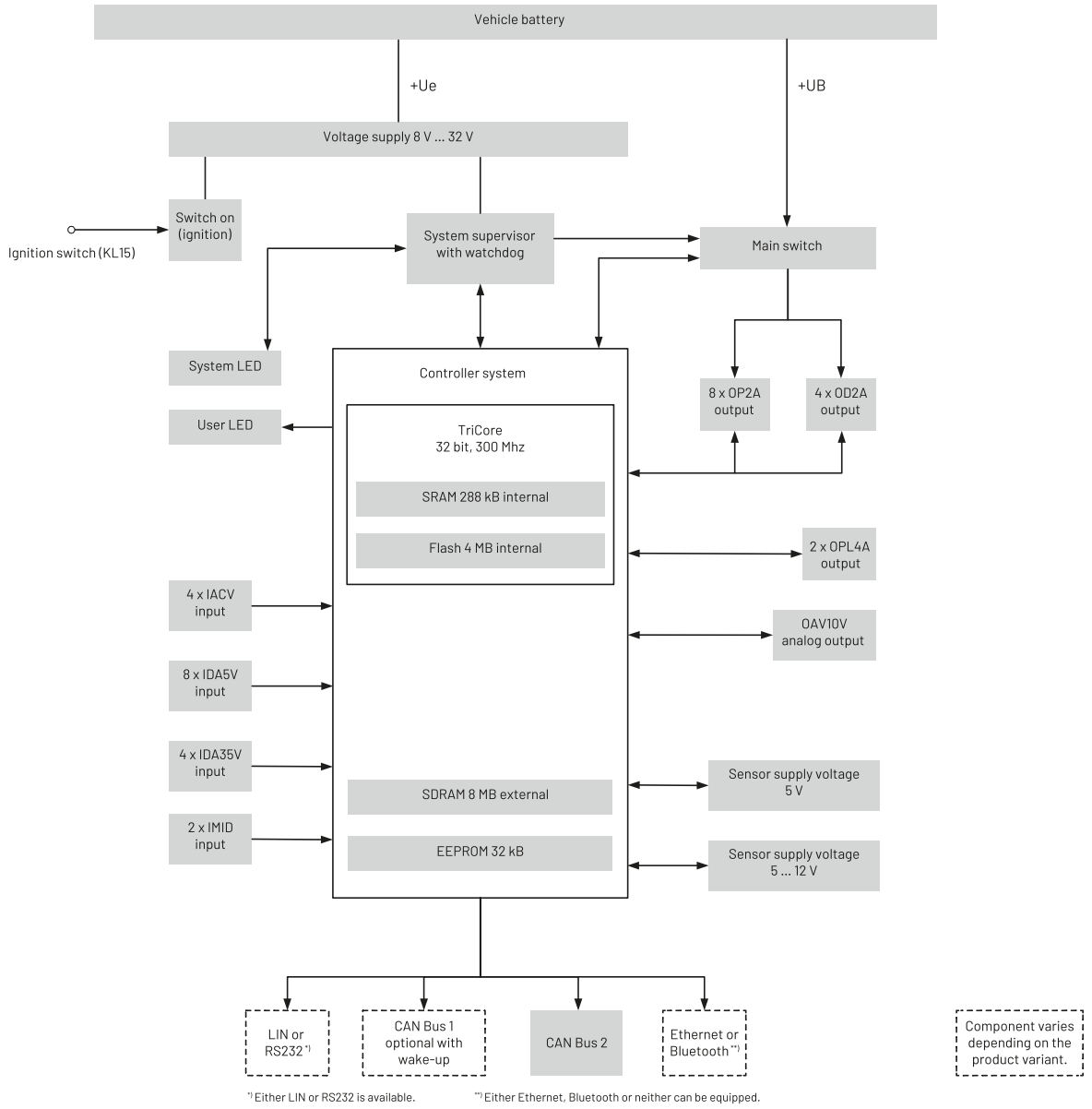

TECHNICAL DATA

Processor and memory

Type	Properties	Description
TriCore TC1798	32 bit, 300 MHz	• External system supervisor with programmable watchdog • 12 bit A/D converter for analog signal processing
SRAM	128 kB internal	On-chip RAM of the TriCore. This memory is used for system and application data. The space available for the customer application depends on the configuration of the system.
DSPRAM	128 kB internal	On-chip RAM of the TriCore without wait states. This memory mainly serves as system memory for BIOS stack and data, but also includes a heap for the customer application.
SDRAM	8 MB	External RAM 7.80 MB available for customer application in C 3 MB available for customer application in CODESYS 7.80 MB available for customer application in IEC 61131-3
Flash	4 MB	Internal Flash 3.75 MB available for customer application in C 2 MB available for customer application in CODESYS 3.75 MB available for customer application in IEC 61131-3
EEPROM	32 kB	24 kB available for customer application in C 24 kB available for customer application in CODESYS 24 kB available for customer application in IEC 61131-3 Typical endurance according to manufacturer: • 1,000,000 erase/program cycles @ 25°C • 300,000 erase/program cycles @ 85°C • data retention > 20 years

TECHNICAL DATA

Communication interfaces

Type	Max. quantity	Configuration
CAN	2	CAN 2.0 B, high-speed and low-speed, baud rate from 40 kbit/s to 1 Mbit/s
		CAN bus 1, optional with wake-up feature
LIN	1	In accordance to LIN specification 2.2A (optional)
RS232	1	Baud rate Baud rate up to 115 kbit/s (optional)
Ethernet	1	Speed up to 100 Mbit/s hardware variant with additional connector (optional)
Bluetooth (scheduled feature)	1	Bluetooth 5.1 (optional)

Not every variant of the ESX.3cs has all the communication interfaces listed. The following assembly options are supported:

- LIN and RS232 share the same connector pins, i.e. either LIN or RS232 is available, but not both.
- The Ethernet and Bluetooth are optional and share the same housing position. I.e. either Ethernet, Bluetooth or neither can be available, but not both at the same time.

TECHNICAL DATA

Inputs

Type	Max. quantity	Possible configuration	Measurement
Multifunctional input IDA35V	4	Analog voltage	0 ... 35 V
		Programmable pull-up resistor to +8.5 V	1.1 kΩ
		Programmable pull-down resistor to GND	1 kΩ
		NAMUR sensor compatible	-
		Digital	Low active
			High active
		Event driven	Events, reacts on falling or rising edge of the signal
		Frequency	0.6 Hz ... 20 kHz
		Incremental encoder interface	Change of position or angular change
Analog input IACV	4	Analog voltage	0 ... 12 V
		Analog current	0 ... 24 mA
		Digital (voltage mode)	Low active
			High active
		Event driven	Events, reacts on falling or rising edge of the signal

TECHNICAL DATA

Inputs

Type	Max. quantity	Possible configuration	Measurement
Multifunctional input IDA5V	8	Analog voltage	0 ... 5 V (suitable for example for PT1000 and KTY)
		Programmable pull-up resistor to +5 V	6.8 kΩ
		Digital	Low active
			High active
		Event driven	Events, reacts on falling or rising edge of the signal
		Frequency	0.6 Hz ... 20 kHz
		SENT interface	
Identification input IMID	2	Externally connected resistors	Open, short to GND and up to 6 different resistor values

Outputs (all outputs are short circuit protected)

Type	Max. quantity	Possible configuration	Range	Characteristics	Feature	Group
Digital-/PWM- output OP2A	8	Digital		ON/OFF	• High side switch • Precise current measurement, accuracy is ±2 % ± 20 mA • Supports current control mode • Digital feedback, open load detection in OFF state • Automated shutdown on overcurrent > 4.6 A ± 0.9 A • Combine several outputs for parallel operation up to 12 A	Power supply via main switch and +UB: 8 outputs All outputs together can drive up to 12 A per group
		PWM	0 ... 2.5 A	0 ... 100 % duty cycle resolution < 0.1 % PWM frequency 20 ... 1000 Hz		

TECHNICAL DATA

Outputs (all outputs are short circuit protected)

Type	Max. quantity	Possible configuration	Range	Characteristics	Feature	Group
Digital output OD2A	4	Digital		ON/OFF	• High side switch • Optimized for digital operation mode (ON/OFF) • Raw current measurement, accuracy is ±25 % ±100 mA • Output voltage feedback • Automated shutdown on overcurrent > 3.6 A ±0.9 A • Combine several outputs for parallel operation up to 12 A	Power supply via main switch and +UB: 4 outputs All outputs together can drive up to 12 A
		PWM	0 ... 2.5 A	0 ... 100 % duty cycle resolution < 0.1 % PWM frequency 20 ... 1000 Hz		
Digital-/PWM- output OPL4A	2	Digital		ON/OFF	• Low side switch • Supports current control mode • Precise current measurement, accuracy is ±3 % ± 100 mA • Output voltage feedback, accuracy is ±3.5 % ±150 mV • Digital feedback, open load detection in OFF state • Automated shutdown on overcurrent > 7.5 A ±1.2 A	Supplied from external load over +UB, or can be combined with a high side switch
		PWM	0 ... 4 A	0 ... 100 % duty cycle resolution < 0.1 % PWM frequency 20 ... 1000 Hz		
Analog voltage output OAV10V	1	Analog voltage signal	0 ... 10 V	0 ... 10 V 10 bit resolution ±1 % ±100 mV	• Voltage feedback, accuracy is ±3 % ±100 mV • Resistive load: ≥ 500 Ω • Capacitive load: ≤ 500 nF • Actuating time ≤ 5 ms at capacitive load of 500 nF	Supplied from ECU power pin +UE

TECHNICAL DATA

Outputs (all outputs are short circuit protected)

Type	Max. quantity	Possible configuration	Range	Characteristics	Feature	Group
Sensor supply Uext	2	Programmable voltage	5 ... 12 V ±2.5 %	Maximal output current I_{MAX} = 250 mA programmable output needs derating for output voltages U_{EXT} < 10 V: I_{MAX} = 0.9 / (13.6 - U_{EXT}) A	• The Uext output voltage is stable also when the +UE input voltage is below the Uext output voltage. E.g. it is possible to use Uext = 12 V when +UE is at the min voltage $+UE_{MIN}$ = 8 V • Voltage feedback accuracy is ±3 % ±100 mV	Supplied from ECU power pin +UE
		Fixed voltage	5 V ±±1 %	Maximal output current I_{MAX} = 250 mA	• Voltage feedback accuracy is ±3 % ±100 mV	

Mechanical data

Component	Description	Value
Connector	XS1	Automotive 48 pins, matching plug: Molex 64320-1311 and 64320-3311
	ETH1	4 pins M12 connector, D-coded
Indicators	2 LED, dual color (red/green or mixed colors)	1 for the state of the system, 1 freely programmable
Housing	Die-cast aluminum	GORE-TEX®-breathing filter for pressure equalization
Weight	-	about 0.565 kg / about 1.25 lb
Degree of protection (plugged connector)	Variant without Ethernet connector	IP6K6, IPX7, IPX9K
	Variant with Ethernet connector	IP6K5, IPX7
	Variant with Bluetooth module	IP6K7
Dimensions	-	169 mm x 139 mm x 40 mm
Operating temperature, housing temperature	-	-40 .. +85°C (-40 .. +185°F)

TECHNICAL DATA

Power Supply

Component	Description	Range	
		Minimum value	Maximum value
DC voltage supply	Voltage at +UE ECU supply and +UB power supply	8 V DC	32 V DC
Current consumption (Load)	12 A power pin fully loaded, including low side outputs, short-term		20 A
Current consumption (Stand-by)	Sum of input currents at +UE and +UB (U_{KL15} = 0 V, ignition off)		< 1 mA
Current consumption (ECU active)	+UE supply current ($U_{KL15} > U_{KL15HIGH}$, no external load, without sensor supply U_{ext})		< 800mA at +UE = 12 V < 400mA at +UE = 24 V
LIN voltage supply	12V supply voltage for LIN. In 24V systems, the 5 ... 12V sensor supply of ESX.3CS can be connected to the LIN supply pin.	8 V DC	16 V DC

TECHNICAL DRAWING

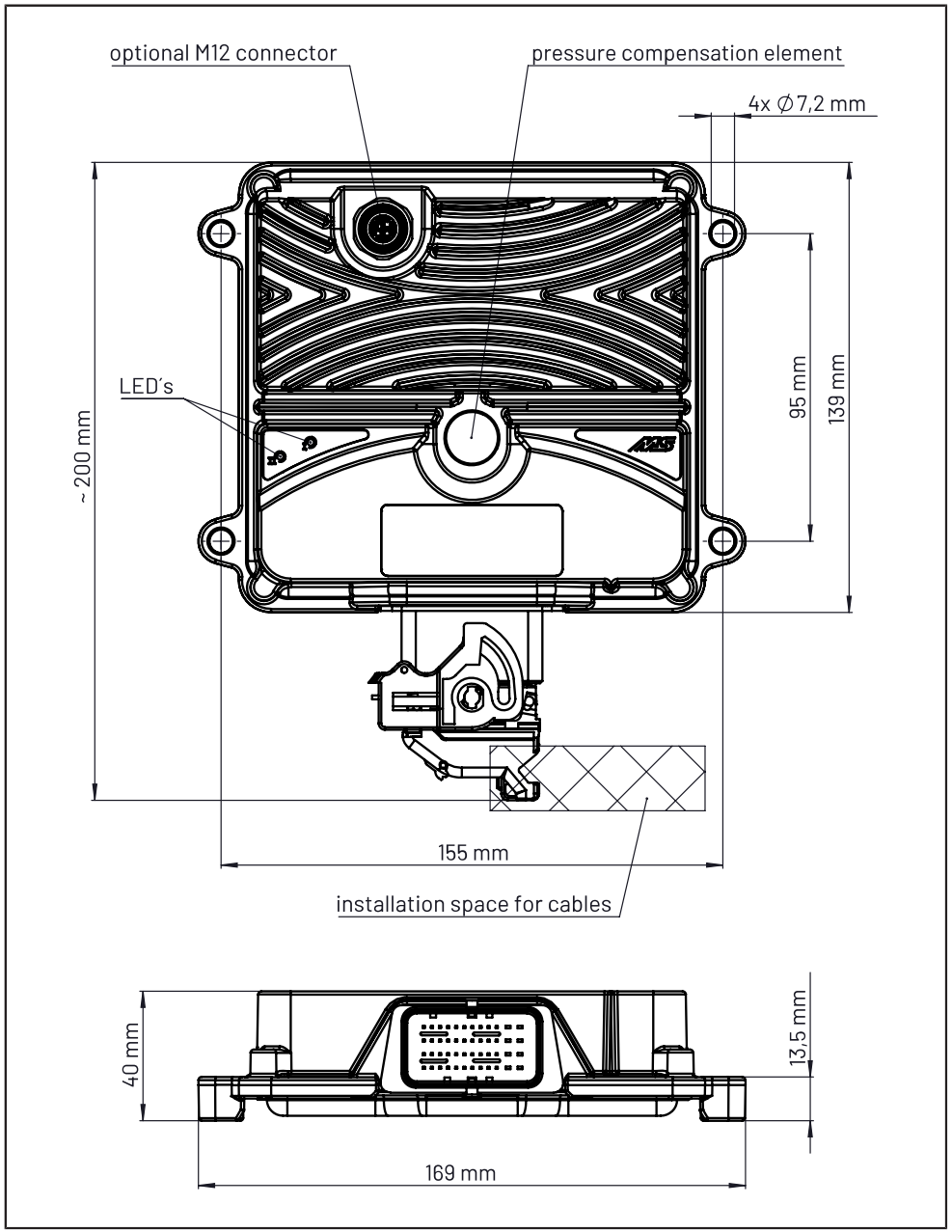

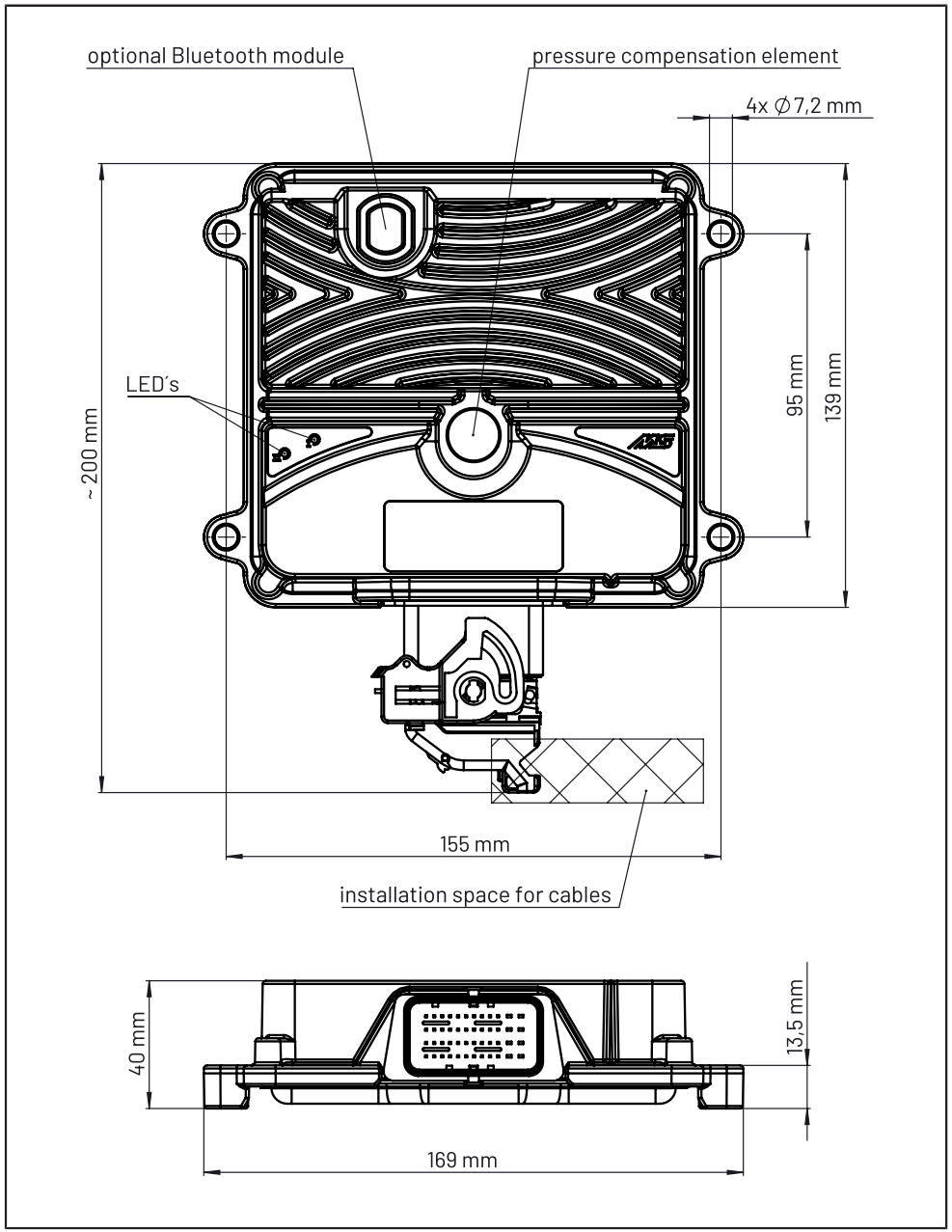

PIN ASSIGNMENT

Pin assignment 48 pin connector:

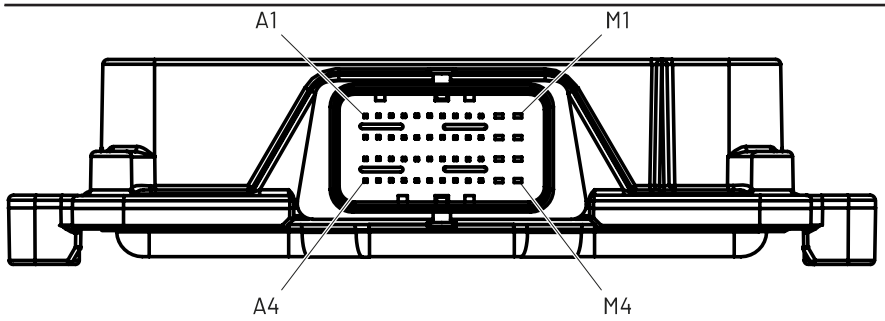

Pin assignment 48 pin connector:

Pin	Functional signal name	BIOS defines	Description
A1	CAN1_L	X_CAN_BUS_01	CAN bus 1 (low)
B1	CAN1_H	X_CAN_BUS_01	CAN bus 1 (high)
C1	RS232_TxD	X_SER_01	RS232 interface (TxD line) or
	LIN_Supply	X_LIN_BUS_01	LIN 12V power supply
D1	RS232_RxD	X_SER_01	RS232 interface (RxD line) or
	LIN_Bus	X_LIN_BUS_01	LIN Bus
E1	IDA5V3	X_IN_11	Input digital, pull-up, SENT, frequency analog input voltage 0 ... 5 V
F1	IDA5V2	X_IN_10	Input digital, pull-up, SENT, frequency analog input voltage 0 ... 5 V
G1	IDA35V2	X_IN_02	Input digital, pull-up and pull-down, NAMUR, frequency, incremental 1-B analog input voltage 0 ... 35 V
H1	OD2A2	X_OUT_12	Output high-side PWM/digital 2.5 A
J1	OP2A4	X_OUT_04	Output high-side PWM/digital 2.5A
K1	OP2A3	X_OUT_03	Output high-side PWM/digital 2.5A
L1	OAV10V	X_OUT_15	Output analog voltage 10V
M1	+UB	X_SYS_RELAY_01 supply for output channel X_OUT_01..08 and 11..14	Power supply for the outputs of type OP2A and OD2A
A2	CAN2_L	X_CAN_BUS_02	CAN bus 2 (low)
B2	CAN2_H	X_CAN_BUS_02	CAN bus 2 (high)

PIN ASSIGNMENT

Pin assignment 48 pin connector:

Pin	Functional signal name	BIOS defines	Description
C2	IACV3	X_IN_07	Analog input current 0 ... 24 mA / voltage 0 ... 12 V, digital functionality with limited bandwidth
D2	IACV2	X_IN_06	Analog input current 0 ... 24 mA / voltage 0 ... 12 V, digital functionality with limited bandwidth
E2	IDA5V6	X_IN_14	Input digital, pull-up, SENT, frequency analog input voltage 0 ... 5 V
F2	IDA5V4	X_IN_12	Input digital, pull-up, SENT, frequency analog input voltage 0 ... 5 V
G2	IDA35V3	X_IN_03	Input digital, pull-up and pull-down, NAMUR, frequency, incremental 2-A analog input voltage 0 ... 35 V
H2	OD2A3	X_OUT_13	Output high-side PWM/digital 2.5 A
J2	OP2A6	X_OUT_06	Output high-side PWM/digital 2.5A
K2	OP2A5	X_OUT_05	Output high-side PWM/digital 2.5A
L2	OPL4A2	X_OUT_10	Output low-side PWM/digital 4 A
M2	OPL4A1	X_OUT_09	Output low-side PWM/digital 4 A
A3	IMID2	-	Identification input
B3	IMID1	-	Identification input
C3	5Vext	X_SYS_SENSOR_SUPPLY_02	Sensor supply voltage 5 V
D3	5-12Vext	X_SYS_SENSOR_SUPPLY_01	Programmable sensor supply voltage 5 ... 12 V

Pin assignment 48 pin connector:

Pin	Functional signal name	BIOS defines	Description
E3	IDA5V7	X_IN_15	Input digital, pull-up, SENT, frequency analog input voltage 0 ... 5 V
F3	IDA5V5	X_IN_13	Input digital, pull-up, SENT, frequency analog input voltage 0 ... 5 V
G3	IDA35V4	X_IN_04	Input digital, pull-up and pull-down, NAMUR, frequency, incremental 2-B analog input voltage 0 ... 35 V
H3	OD2A4	X_OUT_14	Output high-side PWM/digital 2.5 A
J3	OP2A8	X_OUT_08	Output high-side PWM/digital 2.5A
K3	OP2A7	X_OUT_07	Output high-side PWM/digital 2.5A
L3	OP2A2	X_OUT_02	Output high-side PWM/digital 2.5A
M3	OP2A1	X_OUT_01	Output high-side PWM/digital 2.5A
A4	AGND	-	Analog ground for sensory supplies, IMID inputs and OAV10V output
B4	AGND	-	Analog ground for sensory supplies, IMID inputs and OAV10V output
C4	AGND	-	Analog ground for sensory supplies, IMID inputs and OAV10V output
D4	IACV4	X_IN_08	Analog input current 0 ... 24 mA / voltage 0 ... 12 V, digital functionality with limited bandwidth
E4	IACV1	X_IN_05	Analog input current 0 ... 24 mA / voltage 0 ... 12 V, digital functionality with limited bandwidth

PIN ASSIGNMENT

Pin assignment 48 pin connector:

Pin	Functional signal name	BIOS defines	Description
F4	IDA5V8	X_IN_16	Input digital, pull-up, SENT, frequency analog input voltage 0 ... 5 V
G4	IDA5V1	X_IN_09	Input digital, pull-up, SENT, frequency analog input voltage 0 ... 5 V
H4	IDA35V1	X_IN_01	Input digital, pull-up and pull-down, NAMUR, frequency, incremental 1-A analog input voltage 0 ... 35 V
J4	OD2A1	X_OUT_11	Output high-side PWM/digital 2.5 A
K4	KL15	-	Ignition (KL15)
L4	GND	-	Ground of the ECU
M4	+UE	-	Power supply of the ECU

Pin assignment 4 pin M12 connector:

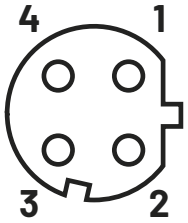

Pin assignment of the M12 connector of the Ethernet interface

Pin	Description	Coding
1	Tx+	D-coded
2	Rx+	
3	Tx-	
4	Rx-	

QUALIFICATION

Compliance information

Standard/Directive	Description		Parameter
2014/53/EU (RED)[01]	CE	Conformity	See Declaration of Conformity
2014/30/EU (EMV)			
FCC 15B, Section 15.247[01]	FCC	This equipment has been tested and found to comply with the limits for a Class B digital device, pursuant to part 15 of the FCC Rules	
KDB 447498[01]		General RF Exposure Guidance	
RSS-247[01] ICES-003[01] RSS-102[01]	ISED	Canada radio approval	
KBA (Kraft-fahrt-Bundesamt)	E1	Certification This approved device can be used on any vehicle type with the following restrictions: All vehicle types with a 12 V respectively 24 V - electrical wiring and battery(-) at the body	According UN ECE Regulation No. 10
2011/65/EU 2015/863/EU	RoHS Restriction of Hazardous Substances		
2006/42/EG	Machinery Directive		

01) Valid for Bluetooth variant only.

DETAILED QUALIFICATION

Electrical safety

Standard	Test description	Test parameter
ISO 16750-2: 2012-11	Overvoltage	12 V: 60 min, Voltage supply = 18 V, T = 65 °C, 1 Cycle 24 V: 60 min, Voltage supply = 18 V, T = 65 °C, 1 Cycle
	Superimposed alternating voltage	12 V: Severity 2: Upp = 4V 24 V: Severity 2: Upp = 4 V
	Slow decrease and increase of supply voltage	Decrease and increase supply voltage with 0.5 V / min
	Momentary drop in supply voltage	12 V: Singel voltage drop to 4.5 V
	Reset behavior at voltage drop	12 V: Voltage drops in 5 % steps until 0 V, drop duration 10 s 24 V: Voltage drops in 5 % steps until 0 V, drop duration 10 s
	Starting profile switch-on hysteresis	12 V: Testlevel 4 24 V: Testlevel 3
	Load Dump	12 V Impulse b: Us* = 70 V, Us = 101 V, 5 Pulses 24 V Impulse b (with LowSide - output): Us* = 58 V, Us = 202 V, 5 Pulses 24 V Impulse b (without LowSide - output): Us* = 70 V, Us = 202 V, 5 Pulses
	Reversed voltage	Test case 2

DETAILED QUALIFICATION

Electrical safety

Standard	Test description	Test parameter
	Ground reference and supply offset	Max. offset (1 ±0.1) V
	Open circuit test - Single line interruption	Interruption 10 s ±1 s
	Open circuit test - Multiple line interruption	Interruption 10 s ±1 s
	Short circuits - signal lines	Connect every In- and Output to Usmax and GND for 1 min
	Short circuits - load lines	To load circuits duration: 5 min

Electromagnetic compatibility (CE)

Standard	Test description	Test parameter
EN 61000-6-3: 2007+A1:2011	Emission	Conducted Emission: 0.15 MHz to 30 MHz Radiated Emission: 30 MHz to 5000 MHz
DIN EN 61000-4-2: 2009-12	Electrostatic Discharge (ESD) direct	330 Ω / 150 pF contact: ±2 kV / ±4 kV / ±6 kV air: ±2 kV / ±4 kV / ±8 kV / ±15 kV
	Electrostatic Discharge (ESD) indirect HCP	330 Ω / 150 pF contact: ±2 kV / ±4 kV / ±6 kV
	Electrostatic Discharge (ESD) indirect VCP	330 Ω / 150 pF contact: ±2 kV / ±4 kV / ±6 kV
DIN EN 61000-6-2: 2006-03	Limits and methods of measurement of radio disturbance; characteristics for the protection of receivers used on board vehicles	80 MHz to 2700 MHz, 10 V/m, 20 V/m
DIN EN 61000-4-4: 2013-04	Burst	1 kV & 2 kV (pos/neg)
DIN EN 61000-4-5: 2007-06	Surge	symmetric: ±0.5 kV dissymmetric: ±1 kV
DIN EN 61000-4-6: 2014	Immunity	10 V (0.15 MHz to 80 MHz) AM: 80 % / sinusoidal: 1000 Hz

DETAILED QUALIFICATION

Electromagnetic compatibility (CE)

According to article 3.1a of 2014/53/EU (RED) (valid for the Bluetooth variant only)

Standard	Version	Title
EN 62368 - 1	2014 & 2020	Audio/video, information and communication technology equipment - Part 1: Safety requirements
EN 62311	2008-09	Assessment of electronic and electrical equipment related to human exposure restrictions for electromagnetic fields (0 Hz – 300 GHz)

According to article 3.1b of 2014/53/EU (RED) (valid for the Bluetooth variant only)

Standard	Version	Title
EN 301 489 - 17	V 3.2.4	ElectroMagnetic Compatibility (EMC) standard for radio equipment and services - Part 17: Specific conditions for Broadband Data Transmission Systems

According to article 3.2 of 2014/53/EU (RED) (valid for the Bluetooth variant only)

Standard	Version	Title
EN 300 328	V 2.2.2	Wideband transmission systems; Data transmission equipment operating in the 2,4 GHz ISM band and using wide band modulation techniques

Electromagnetic compatibility (E1)

Standard	Test description	Test parameter
IEC/CISPR25: 2008/ECE R10	Emission	0.15 MHz to 2500 MHz
ISO 11452-2: 2004-11	Immunity (radiated)	200 MHz bis 3000 MHz, 150 V/m
ISO 11452-4: 2011-12	Immunity (BCI)	0.1 MHz bis 400 MHz, AM (1 kHz, 80 %)
ISO 11452-5: 2002-04	Immunity (Stripline)	0.01 MHz bis 1000 MHz, 200 V/m
ISO 7637-2: 2nd edition 2004+AMD1:2008	Emission	12 V: (pos) +100 V, (neg) -150 V
		24 V: (pos) +200 V, (neg) -600 V
	Road vehicles, electrical disturbance by conduction and coupling	Pulse 1 (12 V): -100 V, 2 ms, 2 Ω, 5000 pulses
		Pulse 1 (24 V): -600 V, 1 ms, 50 Ω, 5000 pulses
		Pulse 2a (12 V): +50 V, 0.05 ms, 2 Ω, 5000 pulses
		Pulse 2a (24 V): +50 V, 0.05 ms, 2 Ω, 5000 pulses
		Pulse 2b (12 V): +10 V, 1 s, 10 pulses
		Pulse 2b (24 V): +20 V, 1 s, 10 pulses
		Pulse 3a (12 V): -150 V, 150 ns, 50 Ω, 1 h
		Pulse 3a (24 V): -200 V, 150 ns, 50 Ω, 1 h

DETAILED QUALIFICATION

Electromagnetic compatibility (E1)

Standard	Test description	Test parameter
		Pulse 3b (12 V): +100 V, 150 ns, 50 Ω, 1 h
		Pulse 3b (24 V): +200 V, 150 ns, 50 Ω, 1 h
		Pulse 4 (12 V): -7 V, 1 pulse
		Pulse 4 (24 V): -16 V, 1 pulse
		Puls a (12 V): -60 V, 10 min
		Puls a (24 V): -80 V, 10 min
		Puls b (12 V): +40 V, 10 min
		Puls b (24 V): +80 V, 10 min
IEC/CISPR25: 2008	Emission	30 kHz to 108 MHz
ISO 10605: 2008-07	Electrostatic Discharge (ESD)	330 Ω / 150 pF, contact: ±2 kV, ±4 kV, ±6 kV, ±8 kV
		330 Ω / 150 pF ±6 kV, ±8 kV, ±15 kV, ±25 kV

Environmental qualification

Standard	Test description	Test parameter
DIN EN 50102:1997-09	Degrees of protection provided by enclosures for electrical equipment against external mechanical impacts (IK code).	IK7 Impact energy (joules): 2
ISO 4892-2:2013-06	Exposure from Xenon-arc lamps	Method A - Testing with filters for global radiation - Cycle no. 1, table 3
DIN EN 60068-2-64:2009-04 ISO 16750-3:2012-12	Resonance search	5 Hz – 2000 Hz, 1 g, 1 oct/min
DIN EN 60068-2-27:2010-02 ISO 16750-3:2012-12	Shock	50 g / 6 ms, halfsine wave, 10 shocks / axis
	Shock	Pulse shape: half-sine Control strategy: single channel Number of shocks: 3 positive, 3 negative per axis Acceleration: 50 g Number of tested axes: 3 Pulse duration: 11 ms
DIN EN 60068-2-31:2009-04 ISO 16750-3:2012-12	Free fall	Drop height: 1 m
DIN EN 60068-2-6:2008-10 ISO 16750-3:2012-12	Vibration (sinusoidal)	Frequency range: 10 Hz - 2000 Hz Acceleration: 5 g Sweep rate: 1 oct/min
DIN EN 60068-2-27:2010-02	Bump	Pulse shape: half-sine Control strategy: single channel Acceleration: 30 g Pulse duration: 6 ms

DETAILED QUALIFICATION

Environmental qualification

Standard	Test description	Test parameter
		Number of tested axes: 3 Number of shocks: 1000 positive, 1000 negative per axis
DIN EN 60068-2-1:2008-01 ISO 16750-4:2010-04	Low temperature, storage	Tmin: -40 °C Duration: 24 h
DIN EN 60068-2-2:2008-05 ISO 16750-4:2010-04	High temperature, storage	Tmax.: +105 °C Duration: 48 h
ISO 16750-4:2010-04	Temperature step test	Tmax.: +85 °C Tmin: - 40 °C Dwell time at each step: 1 hour (38 steps) Duration: 2 days
DIN EN 60068-2-14:2010-04 ISO 16750-4:2010-04	Rapid change of temperature	Tmin: -40 °C Tmax: +85 °C Dwell time at Tmin/Tmax: 60 min Number of cycles: 100
DIN EN 60068-2-14:2010-04 ISO 16750-4:2010-04	Temperature cycle with specified change rate	Tmin: -40 °C Tmax: +85 °C Duration: 30 cycles a 480 min
ISO 16750-4:2010	Ice water shock test - Splash water test	Heat the DUT at Tmax for the specified holding time th, then splash it with ice water (0 °C to +4 °C) for 3 sec.; (th = 1 h or until temp. Stabilization is reached) 100 cycles each 66 Min.
	Salt spray test - Corrosion test	acc. to IEC60068-2-52, Test Kb Severity: Severity 4 Cycle duration: 7 days Number of cycles: 2 cycles

Environmental qualification

Standard	Test description	Test parameter
	Salt spray test - Leakage and function	acc. to IEC60068-2-11, Test Ka Cycle duration: 24 h (8 h salt spray - 16 h without spray) Number of cycles: 6 cycles
	Corrosion test with flow of mixed gas	acc. To IEC60068-2-60, Test Ke, Method 4 Test cycle: 21 days in pollutant gas atmosphere (SO2, H2S, NO2, Cl2)
	Dust test	Test performed as specified in ISO 20653 Cycle duration: 20 min. Number of cycles: 20 cycles
ISO 20653: 2013-02	IP Protection	IP6k6k, IPx7, IPx9k
EN 60068-2-38:2010-06	Damp heat, steady state	Tmax: +65 °C Tmin: -10 °C Duration: 240 h (10 cycles a 24 h)
DIN EN 60068-2-78:2014-02 ISO 16750-4:2010-04	Damp heat, steady state	Tmax: +40 °C Relative humidity: 85 % RH
DIN EN 60068-2-30:2006-06 ISO 16750-4:2010-04	Dewing test	Upper test temperature: +80 °C Lower test temperature: +25 °C Relative humidity: 98 % RH max / 55 % RH min Number of test cycles: 5, 5.5 h per cycle Total test duration: 27.5 h
ISO 16750-5:2010	Chemical resistance	Exposure time 24 h, Exposure condition 20 °C, 85 % relative humidity,

DETAILED QUALIFICATION

Environmental qualification

Standard	Test description	Test parameter
		Gasoline, Methanol, Battery acid, Protective lacquer, Windshield washer fluid, Vehicle washing chemicals, Cold cleaning agent, Cleaning solvent, Denatured alkohol, Runway de-icer, Aceton Exposure time 24 h Exposure condition 125 °C, 85 % relative humidity Diesel fuel, Diesel fuel "Bio", Engine oil, Transmission fluid, Automatic transmission oil, Hydraulic oil, Greasees, Silicone oil, Brake fluid, Antifreeze fluid, Urea, Protective lacquer remover, Contact spray
DIN EN 60068-2-14:2010-04	Life test (Weibull)	-40 °C to +125 °C, dwell time: 1 h, cycle time: 2 h, cycles: 290, test time: 580 h (ca. 24 days)