

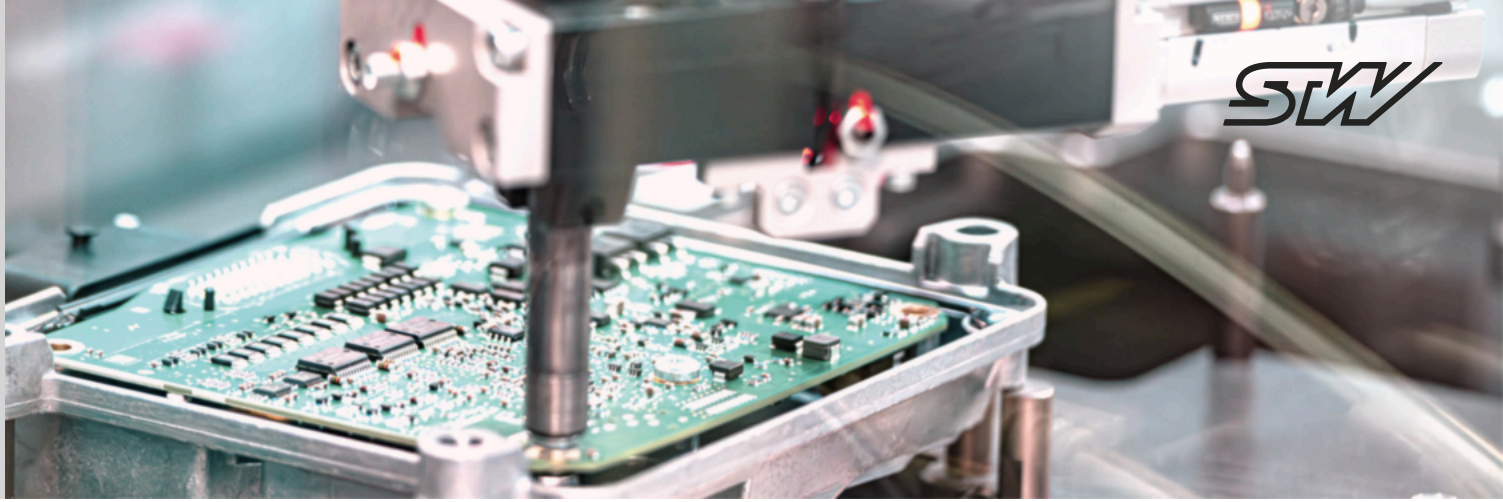

ESX.4ct

ESX control units

KEY FEATURES

- Control specially designed for use in harsh mobile applications
- Flexible programming in C, MATLAB Simulink or Neuron Power Engineer (IEC 61131-3, formerly logi.CAD 3)
- Suitable for safety-related applications up to PL b according to EN ISO 13849-1:2015
- Security
  (HSM, Secure Boot, and Signed Firmware Update)
- Pin-compliant to ESX.ioxp

(SF Scheduled feature

TECHNICAL DATA

- Aurix TC367 dual core 32 bit, 300 MHz
- Internal: 576 kB RAM, 4 MB Flash
- External: EEPROM 32 kB (optional max. 284 kB)
- 2 (optional 3) CAN interfaces,
  CAN FD ready, ISOBUS ISO 11783-3,
  1 RS232 (or optional 1 LIN Spec 2.2A)
- Variants with 14, 18 or 22 inputs
  SENT interface available for 2 input types
- Variants with 13, 9 or 5 outputs
  up to 8 half bridges supporting PVG valves
- 1 sensor supply 5 V ... 12 V, max. 250 mA
- 6-axis inertial measurement unit (IMU) (optional),
  Bluetooth LE v5.1 with internal antenna (optional)(SF

ACCESSORIES

- Integrated into STW's openSYDE software platform
- openSYDE CANopen handler
- Component deployment for C, MATLAB Simulink (SF, and Neuron Power Engineer (IEC 61131-3, formerly logi.CAD 3)
- Mating plugs, development cables, and starter kit
- Debugger
- Compiler

Sensor-Technik Wiedemann GmbH
Am Bärenwald 6
87600 Kaufbeuren
Germany
+49 8341 9505-0
info.stw@wiedemann-group.com
www.stw-mm.com

BLOCK DIAGRAM

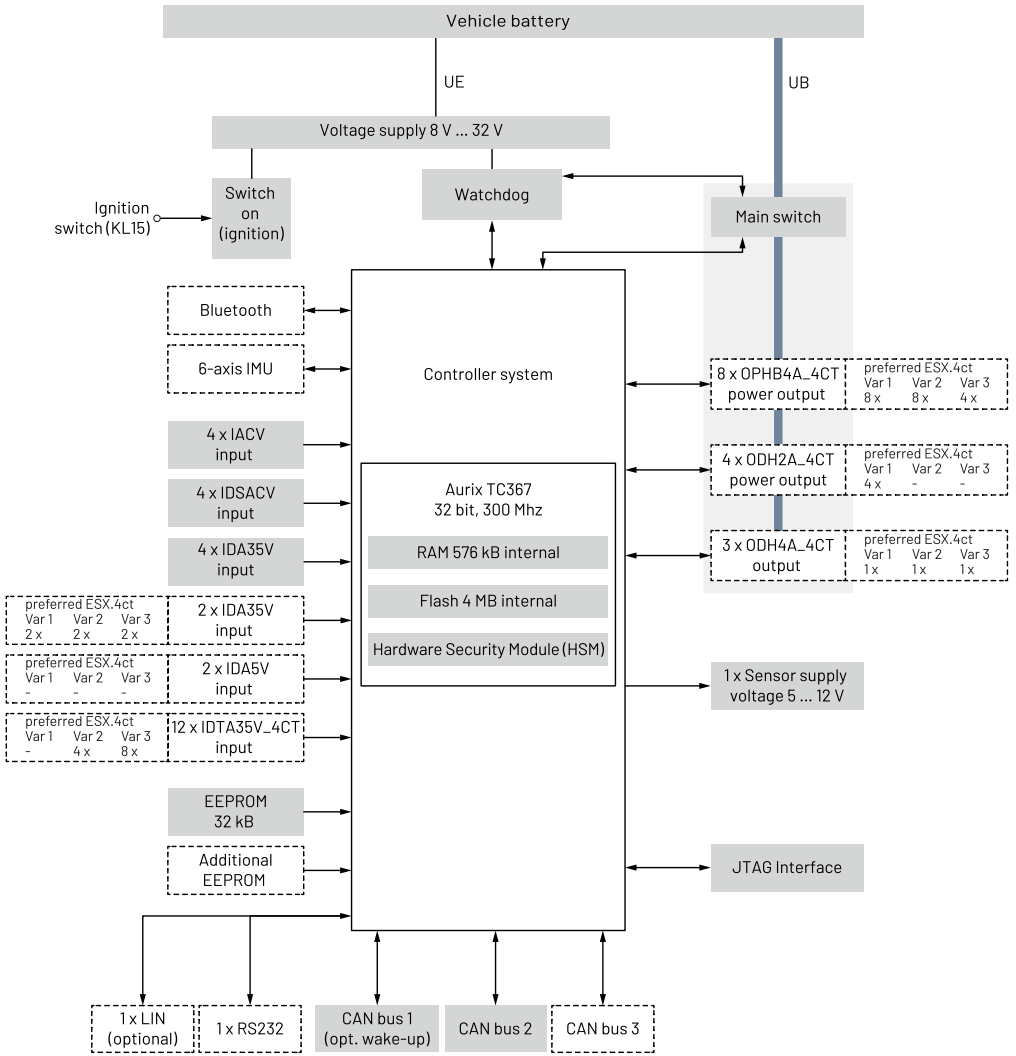

VARIANTS

Variant features of the ESX.4ct The variants listed here are STW standard variants. Further variants available on request. A complete overview of the possible assignment of each individual pin can be found in the PIN ASSIGNMENT.

preferred ESX.4ct	Var 1	Var 2	Var 3
CAN bus	2	2	2
RS232	1	1	1
X_IN_IDA35V	6	6	6
X_IN_IACV	4	4	4
X_IN_IDSACV	4	4	4
X_IN_IDTA35V_4CT	–	4	8
X_OUT_ODH2A_4CT	4	–	–
X_OUT_OPHB4A_4CT (with current measurement)	4/8	4/8	4
X_OUT_OPHB4A_4CT_NCM (without current measurement)	4/0	4/0	–
X_OUT_ODH4A_4CT	1	1	1
X_UEXT_ADJ_5V_12V	1	1	1
EEPROM#1	32 kByte	32 kByte	32 kByte
EEPROM#2	Optional	Optional	Optional
6-axis inertial measurement unit (IMU)	Optional	Optional	Optional
Bluetooth (SF	Optional	Optional	Optional
CAN1 wake-up	Optional	Optional	Optional
CAN1 Termination	Optional	Optional	Optional

(SF Scheduled feature

TECHNICAL DATA

Processor and memory

Type	Properties	Features
Aurix TC367	32 bit, dual core processor, @ 300 MHz	• External system supervisor with window watchdog • 12 bit A/D converter for analog signal processing
Flash	4 MB	With ECC protection
RAM	576 kB	On-chip RAM with ECC protection This memory mainly serves as system memory for BIOS stack and data, but also includes a heap for the customer application.
EEPROM (non volatile memory)	32 kB (optional max. 288 kB total)	4 kB reserved for STW logistic data 28 kB available for customer application (optional max. 284 kB)

Communication interfaces

Type	Maximum quantity	Configuration
CAN	3 (2 by default)	CAN 2.0 B, high-speed and low-speed, baud rate from 100 kbit/s to 1 Mbit/s CAN FD ready, ISOBUS ISO 11783-3 Optional CAN bus 1: Wake-up functionality Optional CAN bus 3 If CAN bus 3 is chosen, the number of available IDA35V is reduced by 2, as both share the same pins.
RS232	1	Baud rate up to 115 kBit/s
LIN	1	LIN Spec. 2.2A Either RS232 or LIN is selectable, as both share the same pins.
Bluetooth(SF	1	Bluetooth LE v5.1 with internal antenna

(SF Scheduled feature

Sensor (optional)

Type	Maximum quantity	Features
6-axis inertial measurement unit (IMU), accelerometer & gyroscope	1	• 3D accelerometer with selectable full scale: ±2/±4/±8/±16 g • 3D gyroscope with extended selectable full scale: ±125/±250/±500/±1000/±2000/±4000 dps

TECHNICAL DATA

Inputs

Type	Maximum quantity	Possible configuration	Measurement	Feature
Digital analog input IDSACV	4	Analog voltage range (programmable)	0 ... 35 V 0 ... 12 V 0 ... 5 V	Voltage measurement accuracy • ±1.2 % ±150 mV (35 V measuring range) • ±1 % ±80 mV (12 V measuring range) • ±0.5 % ±50 mV (5 V measuring range)
		Analog current	0 ... 24 mA	±2 % ±0.13 mA
		Programmable pull-up resistor	1.1 kΩ to +8.5 V 10 kΩ to +5 V	
		Programmable pull-down resistor	1 kΩ to GND	
		NAMUR sensor	NAMUR sensor compatible	
		Digital (voltage mode)	Active high Achtive low	
		Frequency	0.6 Hz ... 20 kHz	• Frequency measurement bandwidth 120 kHz ±40% (signal 10 Vpp and 5 V offset) • Frequency measurement accuracy ±0.4% • Frequency measurement resolution (f_{signal})^2 / 10 MHz
		SENT	SENT interface provided (requires 5 V analog measuring range)	

TECHNICAL DATA

Inputs

Type	Maximum quantity	Possible configuration	Measurement	Feature
Multifunctional input IDA35V	6	Analog voltage	0 ... 35 V	• Voltage measurement bandwidth 115 Hz ±30% • Voltage measurement accuracy ±2% ±300 mV
		Programmable pull-up resistor	1.1 kΩ to +8.5 V	
		Programmable pull-down resistor	1 kΩ to GND	
		NAMUR sensor	NAMUR sensor compatible	
		Digital	Active-high/active-low	
		Edge Evaluation	Events, reacts on falling or rising edge of the signal	
		Frequency	0.6 Hz ... 20 kHz	• Frequency measurement bandwidth 120 kHz ±40% (input signal with 10 V_{pp} and 5 V DC offset) • Frequency measurement accuracy ±0.4%
Analog input IACV	4	Analog voltage	0 ... 12 V	• Voltage measurement accuracy ±2.3% ±100 mV • Voltage measurement impedance 24 kΩ ±10% related to AGND
		Analog current	0 ... 25 mA	• Current measurement accuracy ±2% ±0.20 mA • Current measurement impedance 140 Ω ±10% related to AGND, includes ≈ 0.7 V for the polarity protection diode
		Digital (voltage mode)	Active-high/active-low	

TECHNICAL DATA

Inputs

Type	Maximum quantity	Possible configuration	Measurement	Feature
Multifunctional input IDA5V	2	Analog voltage	0 ... 5 V (suitable for example for PT1000 and KTY)	• Voltage measurement bandwidth 125 Hz ±30% • Voltage measurement accuracy ±2% ±35 mV
		Programmable pull-up resistor	6.8 kΩ to +5 V	
		Digital	Active-high/active-low	
		Edge Evaluation	Events, reacts on falling or rising edge of the signal	
		Frequency	0.6 Hz ... 20 kHz	• Frequency measurement bandwidth 200 kHz ±40% • Frequency measurement accuracy ±0.4%
		SENT	SENT interface	
Digital analog voltage input IDTA35V_4CT	12	Analog voltage	0 ... 35 V	• Voltage measurement bandwidth 132 Hz ±20% • Voltage measurement accuracy ±3% ±150 mV
		Adjustable threshold	1.5 V to 9.0 V	
		Fixed pull-up resistor	36 kΩ to +13.5 V	
		Effective pull-down resistor	≈ 30 kΩ to GND	
		Frequency	0.6 Hz ... 20 kHz	• Frequency measurement bandwidth 100 kHz ±40% • Frequency measurement accuracy ±0.4% at 20 kHz

Outputs

Type	Maximum quantity	Possible configuration	Range	Characteristics	Feature
Digital output ODH2A_4CT	4	Digital	-	ON/OFF	• High side switch • Optimized for digital operation mode (ON/OFF) • Current feedback,measurement accuracy is ±5 % (gain) ±150 mA (offset) • Output voltage feedback, voltage measurement with ±3 % (gain) ±120 mV (offset)
Digital output ODH4A_4CT	3	Digital	-	ON/OFF	• High side switch • Optimized for digital operation mode (ON/OFF) • Current feedback, measurement accuracy is ±5 % (gain) ±300 mA (offset) • Output voltage feedback, voltage measurement with ±3 % (gain) ±120 mV (offset)
Digital/PWM half bridge output OPHB4A_4CT	8	PWM	0 ... 4 A	0 ... 100 % duty cycle resolution < 0.1 % PWM frequency 5 ... 20000 Hz	• Push-pull output • current measurement ±2 % ±60 mA • Supports current control mode • Digital feedback • Output voltage feedback, accuracy is 3 % ±120 mV • Automated shutdown on overcurrent • Automated shutdown on overtemperature • Two half-bridge outputs might be combined as full-bridge • Control of PVG valves possible

TECHNICAL DATA

Outputs

Type	Maximum quantity	Possible configuration	Range	Characteristics	Feature
Digital/PWM half bridge output OPHB4A_4CT, NCM (no current measurement)	4	PWM	0 ... 4 A	0 ... 100 % duty cycle resolution < 0.1 % PWM frequency 5 ... 20000 Hz	• Push-pull output • Digital feedback • Output voltage feedback, accuracy is 3 % ±120 mV • Automated shutdown on overcurrent • Automated shutdown on overtemperature • Two half-bridge outputs might be combined as full-bridge • Control of PVG valves possible **Optional with current measurement:** • Current measurement ±2 % ±60 mA • Supports current control mode
Main Switch	1		8 ... 32 V DC	ON/OFF	• Powers all digital and PWM outputs • Current up to 15 A
Sensor supply voltage 5 ... 12 V	1	Voltage	5 ... 12 V	Accuracy voltage output is ±0.9% ±50 mV This is valid under the following conditions: • Capacitive load ≤470 µF • Settling time 100 ms	• Maximal output current I_{MAX} = 250 mA • Programmable output needs derating for output voltages U_{EXT} < 10 V: I_{MAX} = 0.875 / (13.5 - U_{EXT}) A • Accuracy voltage feedback: ±0.9% ±50 mV

TECHNICAL DATA

Mechanical data

Component	Description	Value
Connector	Automotive type vehicle connector (compatible to TE part number 1-0967281-1)	42 pin, 3 row, cable suited plug
IP protection class	-	IP6Kx, IPx6, IPx7
Weight	-	≈ 0.32 kg
Dimensions (L x W x H)	-	174 x 117 x 36 mm
Operating temperature (T_{min} / T_{max})	Internal PCB temperature (to be checked/ensured by application)	-40 °C ... +85 °C

Power supply

Component	Description	Range	
		Minimum Value	Maximum Value
DC voltage supply	Voltage at +UE ECU supply and +UB power supply	8 V DC	32 V DC
Current consumption	Power supply +UB fully loaded		12 A
	Standby: Sum of input currents at +UE and +UB (U_{KL15} = 0 V, ignition off) Without external load		< 1 mA
	ECU active: +UE supply current (U_{KL15} > $U_{KL15HIGH}$, no external load)		≈ 250 mA at +UE = 8 V ≈ 100 mA at +UE = 32 V

TECHNICAL DRAWING

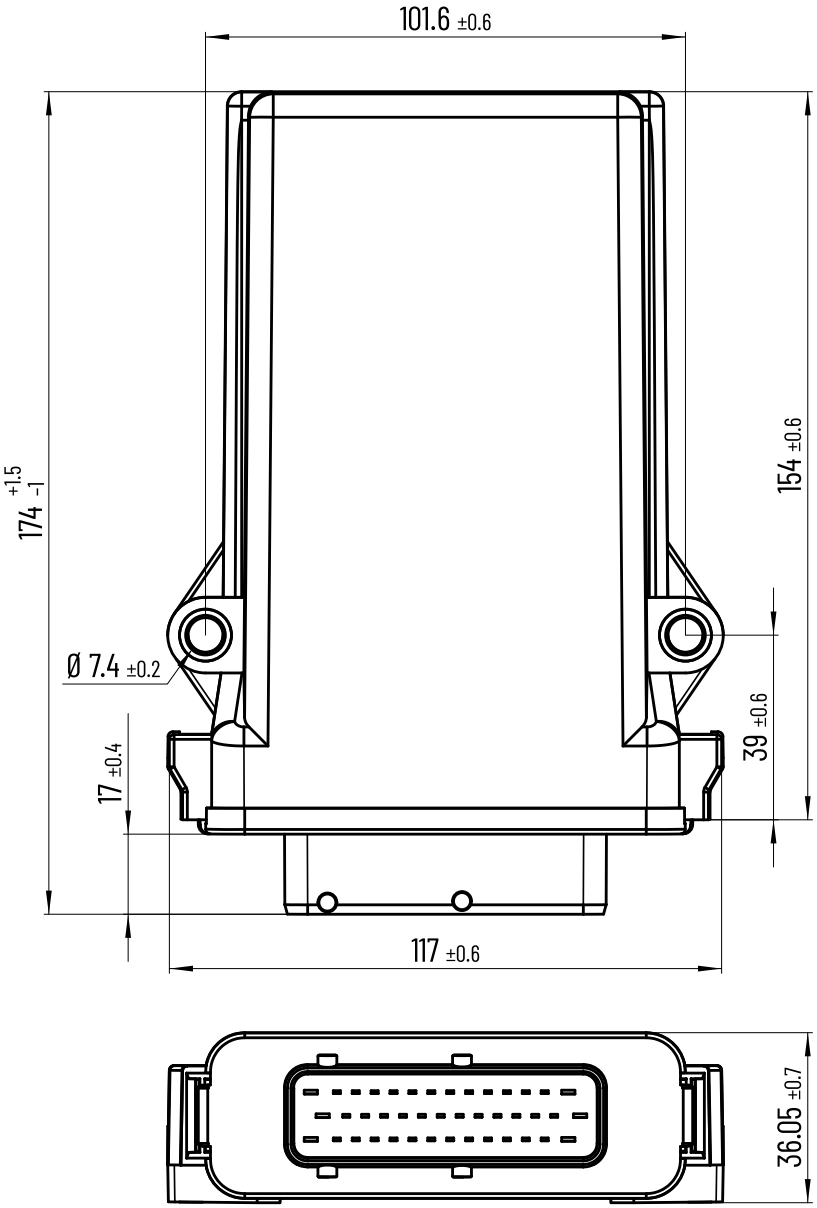

PIN ASSIGNMENT

Pin Assigment X1

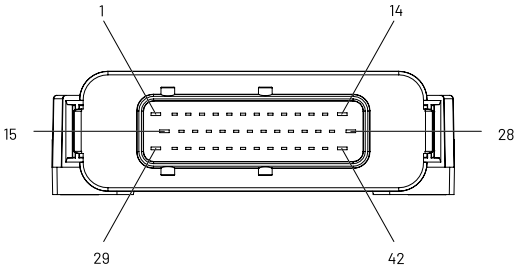

Pin	Type	BIOS define, first function	BIOS define, second function	BIOS define, third function
X1.01	GND	–	–	–
X1.02	Input | output	X_OUT_ODH2A_4C-T_1	X_IN_IDTA35V_4C-T_1	–
X1.03	Input | output	X_OUT_ODH2A_4C-T_2	X_IN_IDTA35V_4C-T_2	X_OUT_ODH4A_4C-T_2
X1.04	Input | output	X_OUT_ODH2A_4C-T_3	X_IN_IDTA35V_4C-T_3	–
X1.05	Input | output	X_OUT_ODH2A_4C-T_4	X_IN_IDTA35V_4C-T_4	X_OUT_ODH4A_4C-T_4
X1.06	Input | output	X_OUT_OPHB4A_4C-T_1	X_IN_IDTA35V_4C-T_5	X_OUT_OPHB4A_4C-T_1 (NCM)*
X1.07	Input | output	X_OUT_OPHB4A_4C-T_2	X_IN_IDTA35V_4C-T_6	X_OUT_OPHB4A_4C-T_2 (NCM)*
X1.08	Input | output	X_OUT_OPHB4A_4C-T_3	X_IN_IDTA35V_4C-T_7	X_OUT_OPHB4A_4C-T_3 (NCM)*
X1.09	Input | output	X_OUT_OPHB4A_4C-T_4	X_IN_IDTA35V_4C-T_8	X_OUT_OPHB4A_4C-T_4 (NCM)*
X1.10	Input | output	X_OUT_OPHB4A_4C-T_5	X_IN_IDTA35V_4C-T_9	X_OUT_OPHB4A_4C-T_5 (NCM)*

Pin Assigment X1

Pin	Type	BIOS define, first function	BIOS define, second function	BIOS define, third function
X1.11	Input | output	X_OUT_OPHB4A_4C-T_6	X_IN_IDTA35V_4C-T_10	X_OUT_OPHB4A_4C-T_6 (NCM)*
X1.12	Input | output	X_OUT_OPHB4A_4C-T_7	X_IN_IDTA35V_4C-T_11	X_OUT_OPHB4A_4C-T_7 (NCM)*
X1.13	Input | output	X_OUT_OPHB4A_4C-T_8	X_IN_IDTA35V_4C-T_12	X_OUT_OPHB4A_4C-T_8 (NCM)*
X1.14	UB	X_MSW_01	–	–
X1.15	AGND	–	–	–
X1.16	KL15	–	–	–
X1.17	CAN bus 1 low	X_CAN_BUS_01	–	–
X1.18	Input | RS232_TXD | LIN bus	X_IN_IDA5V_1	X_SER_01 (TXD)	X_LIN_01
X1.19	Output | Uext	X_OUT_ODH4A_4C-T_1	X_UEXT_AD-J_5V_12V_1 (hard-wired to X1.32)	–
X1.20	Input	X_IN_IDA35V_1	–	–
X1.21	Input	X_IN_IDA35V_2	–	–
X1.22	Input | CAN bus 3 high	X_IN_IDA35V_3	X_CAN_BUS_03	–
X1.23	CAN bus 2 high | CAN bus 1 high	X_CAN_BUS_02	X_CAN_BUS_01	–
X1.24	Input	X_IN_IACV_1	–	–

QUALIFICATION

Pin Assigment X1

Pin	Type	BIOS define, first function	BIOS define, second function	BIOS define, third function
X1.25	Input	X_IN_IACV_2	–	–
X1.26	Input	X_IN_IDSACV_1	–	–
X1.27	Input	X_IN_IDSACV_2	–	–
X1.28	UB	X_MSW_01	–	–
X1.29	GND	–	–	–
X1.30	UE	–	–	–
X1.31	CAN bus 1 high	X_CAN_BUS_01	–	–
X1.32	Uext	X_UEXT_AD-J_5V_12V_1	–	–
X1.33	Input | RS232_RXD | LIN power supply	X_IN_IDA5V_2	X_SER_01 (RXD)	X_LIN_01 (supply) **
X1.34	Input	X_IN_IDA35V_4	–	–
X1.35	Input	X_IN_IDA35V_5	–	–
X1.36	Input | CAN bus 3 low	X_IN_IDA35V_6	X_CAN_BUS_03	–
X1.37	CAN bus 2 low | CAN bus 1 low	X_CAN_BUS_02	X_CAN_BUS_01	–
X1.38	Input	X_IN_IACV_3	–	–
X1.39	Input	X_IN_IACV_4	–	–

Pin Assigment X1

Pin	Type	BIOS define, first function	BIOS define, second function	BIOS define, third function
X1.40	Input	X_IN_IDSACV_3	–	–
X1.41	Input	X_IN_IDSACV_4	–	–
X1.42	UB	X_MSW_01	–	–

* NCM = No current measurement: The output type OPHB4A, provided for this variant of the ESX.4ct has no current feedback signal.

** Note: The ESX.4ct optionally provides a LIN interface on pin X1.18 to communicate with LIN nodes (X_LIN_01 / q_Lin_e-quipped).
However, even in case of X_LIN_01 available, the functionality on pin X1.33 can provide two different functions (depends on the ordered hardware variant):

- If X1.33 is defined as <X_LIN_01 (supply)>, a voltage has to be applied on this pin to supply the LIN transceiver within the 4CT, ie. this is a supply input (not a supply output for other LIN bus nodes)
- If X1.33 is defined as <X_IN_IDA5V_2>, the 4CT LIN transceiver is powered by an internal voltage that is derived from UE (X1.30)

Compliance information

Standard	Description	Parameter
ISO/IEC 17050-1	CE Conformity	See Declaration of Conformity
ISO 11783-2:2019	CAN ISOBUS conformity	
KBA (Kraft-fahrt-Bundesamt)	E1 Certification	According UN ECE Regulation No. 10
2011/65/EU 2015/863/EU	RoHS	Restriction of Hazardous Substances

DETAILED QUALIFICATION

CE - EN IEC 61000-6-2:2019

Standard	Test	Parameter
EN IEC 61000-6-2:2019 Immunity for industrial environments	Electrostatic discharge immunity test - direct discharges DIN EN 61000-4-2	330 Ω / 150 pF, Contact discharge ± 4 kV Air discharge ±2 kV, ±4 kV, ±8 kV
	Electrostatic discharge immunity test - indirect discharges (HCP, VCP) DIN EN 61000-4-2	330 Ω / 150 pF, Contact discharge ± 4 kV
	Radiated, radio-frequency, electromagnetic field immunity test DIN EN 61000-4-3	80 MHz to 1000 MHz -> 10 V/m; 1.4 GHz to 6.0 GHz -> 3 V/m; horizontal and vertical
	Burst - supply lines (Electrical fast transient / burst immunity test) DIN EN 61000-4-4	± 1 kV, 5/50 ns tr/th, repetition frequency 100kHz
	Burst - data lines (Electrical fast transient / burst immunity test) DIN EN 61000-4-4	± 1 kV, 5/50 ns tr/th, repetition frequency 100kHz
	Surge - supply lines (immunity test) DIN EN 61000-4-5	Asymmetrical coupling: ± 0,5 kV Symmetrical coupling: ± 0,5 kV Test on supply lines performed as informative on basis that cable length does not exceed 30m.
	Surge - data lines (immunity test) DIN EN 61000-4-5	Asymmetrical coupling: ± 0,5 kV, ± 1 kV Test on LIN is not required on basis that cable length does not exceed 30m.

CE - EN IEC 61000-6-2:2019

Standard	Test	Parameter
	Conducted immunity - supply lines (Immunity to conducted disturbances, induced by radio-frequency fields) DIN EN 61000-4-6	150 kHz to 80 MHz, 10 V
	Conducted immunity - data lines (Immunity to conducted disturbances, induced by radio-frequency fields) DIN EN 61000-4-6	150 kHz to 80 MHz, 10 V
	Immunity to magnetic fields DIN EN 61000-4-8	50 Hz / 60 Hz, 30 A/m
EN 61000-6-4:2007 + A1:2011	Emission standard for industrial environments	Conducted (CE) 0.15 MHz ... 30 MHz Radiated (RE) 30 MHz ... 2000 MHz 10m

DETAILED QUALIFICATION

Automotive EMC tests - E1 (ECE R10)

Standard	Test	Parameter
UN ECE R10 Add. 9, Rev. 6 Annex 7	Radiated broadband emissions from ESAs CISPR25:2004	30 MHz ... 1000 MHz
UN ECE R10 Add. 9, Rev. 6 Annex 8	Radiated narrowband emissions from ESAs CISPR25:2004	30 MHz ... 1000 MHz
UN ECE R10 Add. 9, Rev. 6 Annex 9	Immunity of ESAs to electromagnetic radiation General: ISO 11452-1:2005 ALSE: ISO 11452-2:2004 BCI: ISO 11452-4:2011 (Stripline and TEM alternative test methods)	General 20 MHz ... 2000 MHz 20 MHz ... 800 MHz: AM 800 MHz ... 2000 MHz: PM BCI: 20 MHz ... 400 MHz, 60 mA (substitution (150 mm) or closed loop (900 mm) method allowed) Antenna, ALS E (vert): 200 MHz ... 800 MHz, 30 V/m, AM 800 MHz ... 2000 MHz, 30 V/m, PM
UN ECE R10 Add. 9, Rev. 6 Annex 10	Conducted transient emission from ESAs on 12 V supply lines ISO 7637-2:2004	Slow/fast: Pos: +75 V Neg: -100 V
	Conducted transient emission from ESAs on 24 V supply lines ISO 7637-2:2004	Slow/fast: pos: +150 V neg: -450 V
	Electrical transient conduction along supply lines 12 V System, Level 3 ISO 7637-2:2004	Pulse 1 - 75 V, 5000 pulses t1 = 0,5 s to 5 s
		Pulse 2a 37 V, 5000 pulses t1 = 0,2 s to 5 s

Automotive EMC tests - E1 (ECE R10)

Standard	Test	Parameter
		Pulse 2b 10 V, 10 pulses td = 0,2 s to 2 s
		Pulse 3a -112 V, 1 hr
		Pulse 3b 75 V, 1 hr
		Pulse 4 Us = -6 V Ua = -2,5 V to -6 V 1 pulse
	Electrical transient conduction along supply lines 24 V System, Level 3 ISO 7637-2:2004	Pulse 1 - 450 V, 5000 pulses t1 = 0,5 s to 5 s
		Pulse 2a 37 V, 5000 pulses t1 = 0,2 s to 2 s
		Pulse 2b 20 V, 10 pulses td = 0,2 s to 2 s
		Pulse 3a -150 V, 1 hr
		Pulse 3b +150 V, 1 hr
		Pulse 4 Us = -12 V Ua = -5 V to -12 V 1 pulse

DETAILED QUALIFICATION

Electrical safety

Standard	Test	Parameter
ISO 16750-2:2012-11	Direct current supply voltage	Operation at Tmax with- maximum and minimum voltage Operation at Tmin with- maximum and minimum voltage Testduration for each voltage level: 60 min.
	Overvoltage - Systems with 12 V / 24 V nominal voltage - 12 V System	18 V for 60 min. at 20 °C below Tmax
	Overvoltage - Systems with 12 V / 24 V nominal voltage - 24 V System	36 V for 60 min. at 20 °C below Tmax
	Superimposed alternating voltage - 12 V System	Usmax = 16 V (for U_N = 12 V) Sweep duration: 120 seconds Number of sweeps: 5 Severity 4: Upp = 2 V @ Unom 12 V
	Superimposed alternating voltage - 24 V System	Usmax = 32 V (for U_N = 24 V) Sweep duration: 120 seconds Number of sweeps: 5 Severity 3: Upp = 10 V @ Unom 24 V
	Slow decrease and increase of supply voltage	Decrease supply voltage from Usmin to 0 V and increase it from 0 V to Usmin. Applying a change rate of (0.5 ± 0.1)V per minute
	Discontinuities in supply voltage - Momentary drop in supply voltage - 24 V System	Drop to 9 V for ≤ 100 ms
	Discontinuities in supply voltage - Reset behavior voltage drop	Decrease supply voltage from Usmin in 5 % steps

Electrical safety

Standard	Test	Parameter
	Discontinuities in supply voltage - Starting profile 12 V code C	Voltage cranking; Level 3
	Discontinuities in supply voltage - Starting profile 24 V code E	Voltage cranking; Level 2
	Discontinuities in supply voltage- Load Dump (Pulse B) - 12 V System	Test with centralized load dump suppression 5 pulses Us = 101 V, Us* = 35 V, Ri = 4 Ohm, td = 400 ms
	Discontinuities in supply voltage- Load Dump (Pulse B) - 24 V System	Test with centralized load dump suppression 5 pulses Us = 202 V, Us* = 70 V, Ri = 8 Ohm, td = 350 ms
	Reversed voltage - Case 2 - 12 V System	Unom. = 12 V -> Case 2 - Test Voltage = - 14 V reversed polarity Duration: 60 s
	Reversed voltage - Case 2 - 24 V System	Unom. = 24 V -> Case 2 - Test Voltage = 28 V reversed polarity Duration: 60 s
	Ground reference and supply offset - 12 V System	± 1 V offset; only required if two or more power supplies exist; Low-Side-Sensor must be connected to ground point at ECU connector Case 1: offset between UB and UE, if no internal connection exists

DETAILED QUALIFICATION

Electrical safety

Standard	Test	Parameter
	Ground reference and supply offset - 24 V System	± 1 V offset; only required if two or more power supplies exist; Low-Side-Sensor must be connected to ground point at ECU connector Case 1: offset between UB and UE, if no internal connection exists
	Open circuit tests - Single line interruption - 12 V System	Interruption of each single output for (10 ± 1) s.
	Open circuit tests - Single line interruption - 24 V System	Interruption of each single output for (10 ± 1) s.
	Open circuit tests - Multiple line interruption - 12 V System	Disconnect the DUT for (10 ± 1) s.
	Open circuit tests - Multiple line interruption - 24 V System	Disconnect the DUT for (10 ± 1) s.
	Short circuit protection - signal circuits	Connect every in- and output to maximum supply voltage (Usmax) and ground for 1 minute, various modes necessary

Earth-moving and building construction machinery (EMC tests) - ISO 13766-1

Standard	Test	Parameter
DIN EN ISO 13766-1:2019	Radiated Emission - Broadband CISPR25:2008	30 ... 75 MHz: 64 ... 54 dBµV QP 75 ... 400 MHz: 54 ... 65 dBµV QP 400 ... 1000 MHz: 65 dBµV QP 120 kHz, 1m
	Radiated Emission - Narrowband CISPR25:2008	30 ... 75 MHz: 54 ... 44 dBµV PK 75 ... 400 MHz: 44 ... 55 dBµV PK 400 ... 1000 MHz: 55 dBµV PK 120 kHz, 1m
	Immunity of ESAs to electromagnetic radiation ALSE: ISO 11452-2:2004 BCI: ISO 11452-4:2011 (Stripline and TEM alternative test methods)	General 20 MHz ... 2000 MHz 20 MHz ... 800 MHz: AM 800 MHz ... 2000 MHz: PM BCI: 20 MHz ... 400 MHz, 48 mA (substitution, 150 mm, 450 mm, 750 mm) Antenne, ALSE (hor/ver) 200 MHz ... 800 MHz, 24 V/m, AM 800 MHz ... 2000 MHz, 24 V/m, PM
	ESD - Component immunity test method Powered-up test - direct discharges ISO 10605:2008	2000 Ω / 330 pF, 2000 Ω / 150 pF, contact: ± 2 kV, ± 4 kV, ± 6 kV air: ± 2 kV, ± 4 kV, ± 8 kV
	ESD - Component immunity test method Powered-up test - indirect discharges ISO 10605:2008	2000 Ω / 330 pF, 2000 Ω / 150 pF, contact: ± 2 kV, ± 4 kV, ± 6 kV air: ± 2 kV, ± 4 kV, ± 8 kV

DETAILED QUALIFICATION

Earth-moving and building construction machinery (EMC tests) - ISO 13766-1

Standard	Test	Parameter
	Conducted transient emission from ESAs on 12 V supply lines, Level 3 ISO 7637-2:2011	Slow+: +37 V Slow-: -75 V Fast+: +75 V Fast-: -112 V
	Conducted transient emission from ESAs on 24 V supply lines, Level 3 ISO 7637-2:2011	Slow+: +37 V Slow-: -150 V Fast+: +150 V Fast-: -150 V
	Electrical transient conduction along supply lines - 12 V System, Level 3 ISO 7637-2:2011	Pulse 1, -112 V, 500 pulses t1 ≥ 0,5s
		Pulse 2a +55 V, 500 pulses t1 = 0,2 s to 5 s
		Pulse 2b +10 V, 10 pulses td = 0,2 s to 2 s
		Pulse 3a, -165 V, 1 h
		Pulse 3b, +112 V, 1 h
	Electrical transient conduction along supply lines - 24 V System, Level 3 ISO 7637-2:2011	Pulse 1 -450 V, 500 pulses t1 ≥ 0,5s
		Pulse 2a +55 V, 500 pulses t1 = 0,2s to 5s
		Pulse 2b +20 V, 10 pulses td = 0,2s to 2s

Earth-moving and building construction machinery (EMC tests) - ISO 13766-1

Standard	Test	Parameter
		Pulse 3a, -220 V, 1h
		Pulse 3b, +220 V, 1h
	Discontinuities in supply voltage - Starting profile 12 V code C ISO 16750-2:2012	Voltage Cranking: Level 4 Note: DUT performs powers down at 6 V, hence only Level 3 is achieved.
	Discontinuities in supply voltage - Starting profile 24 V code E ISO 16750-2:2012	Voltage Cranking: Level 2
	Discontinuities in supply voltage - Load Dump (Pulse B) - 12 V System ISO 16750-2:2012	With centralized load dump suppression 5 Pulses Us = 101 V, Us* = 35 V, Ri = 4 Ohm, td = 400 ms
	Discontinuities in supply voltage - Load Dump (Pulse B) - 24 V System ISO 16750-2:2012	With centralized load dump suppression 5 Pulses Us = 202 V, Us* = 58 V, Ri = 8 Ohm, td = 350 ms

DETAILED QUALIFICATION

Environmental qualification

Standard	Test	Parameter
ISO 16750-3:2012	Resonance search	10 Hz - 2000 Hz, 1g, 0,5 oct/min
	Test VII - Commercial vehicle, sprung masses	Vibration noise with temperature superimposition in case of natural frequencies of DUT upper 30 Hz: random vibration acc IEC60068-2-64 from 10 Hz to 2000 Hz for 32 hrs each axis, temperature cycle 8 h from Tmin to Tmax.
	Mechanical Shock - Test for devices on rigid points on the body and on the frame	In acc. IEC 60068-2-27 Half-sinusoidal acceleration 500 m/s^2 Duration 6 ms Room temperature 10 shocks per test direction
	Free fall (parts that may withstand falling without damages)	3 devices, 2 falls every device on the opposite side of the housing. drop height: 1 m to concrete ground or steel plate
ISO 16750-4:2010	Tests at constant temperature: Low temperature - storage	- 40 °C for 24 hrs
	Tests at constant temperature: Low temperature - operation	Tmin for 24 hrs
	Tests at constant temperature: High temperature - storage	+85 °C for 48 hrs
	Tests at constant temperature: High temperature - operation	Tmax for 96 hrs

Environmental qualification

Standard	Test	Parameter
	Temperature step test	20 °C to Tmin to Tmax, 5 °C steps; Perform functional tests (OM 3.2) when DUT has reached the new temperature with Usmin and Usmax
	Temperature cycling test	Acc. to IEC 60068-2-14, test Nb 30 cycles á 480 min, Tmin to Tmax Duration: 10 days OM 3.2 for phases with electrical operation
	Temperature cycling test - Rapid change of Temperature	Acc. to IEC 60068-2-14, test Na Transfer time ≤ 30 sec. 100 cycles, Tmin to Tmax Dwell time: 60 min.
	Salt spray test - Corrosion test	Acc. to IEC60068-2-52, test Kb Severity 4
	Salt spray test - Leakage and function	Acc. to IEC60068-2-11, Ka; 8 h salt spray and 16 h without spray, minimum 6 cycles á 24 hrs
	Humid heat cyclic - Test 2: Composite temperature / humidity cyclic test	Acc. to IEC60068-2-38, -Z/AD 10 cycles, upper temperture +65 °C 93 % r.H. 5 cycles with frost phase (-10 °C); Duration: 11 days *OM 3.2 when the maximum cycle temperature is reached;

DETAILED QUALIFICATION

Environmental qualification

Standard	Test	Parameter
	Humid head cyclic - Test 3: Dewing test	In acc. to IEC 60068-2-38, test Db Upper temp.: 80 °C, 5 cycles
	Damp heat, steady-state test	Acc. to IEC60068-2-78; +40 °C and 85 % r.H. OM: 2.1 for 20 days 23 hrs OM: 3.2 for the last hour Duration: 21 days
	Corrosion test with flow of mixed gas	Acc. to IEC60068-2-60, test Ke, method 4; (SO2, H2S, NO2, CL2) Test duration: 21 days
	Solar radiation	Confirmation of housing- and plug manufacturer about UV and OZON durability or test e.g. ISO 75220 or DIN EN 60068-2-5
	Dust Test	Acc. to ISO 20653 but different dust 50 % limestone 50 % fly ash (33 % < 32 µm, 67 % >32 µm but <250 µm) 20 cycles
	Protection against dust and water - IP Protection ISO 20653:2013-02	Dust test - IP6kX
		Water test - IPX6k
		Water test - IPX7
		Water test - IPX9k
ISO 16750-5:2010	Chemical resistance - Code D	Exposure time 22 h, RT Agents - protective lacquer, cold cleaning agent, cavity protection, ammonia containing cleaner Exposure time 2 h, RT Agents - windscreen washer fluid, wheel cleaner, vehicle washing chemicals, glass cleaner, runway de-icer Exposure time 10 min, RT Agent - denatured alcohol Exposure time 22h, +65 °C Agents - protective lacquer remover, Ad-Blue/Urea

Environmental qualification

DETAILED QUALIFICATION

Agricultural and forestry machines (EMC tests) - ISO 14982

Standard	Test	Parameter
DIN EN ISO 14982:2009	Radiated Emission - Broadband CISPR16 / CISPR12	30 ... 75 MHz: 64 ... 54 dBµV QP 75 ... 400 MHz: 54 ... 65 dBµV QP 400 ... 1000 MHz: 65 dBµV QP 120kHz, 1m
	Radiated Emission - Narrowband CISPR16 / CISPR12	30 ... 75 MHz: 54 ... 44 dBµV PK 75 ... 400 MHz: 44 ... 55 dBµV PK 400 ... 1000 MHz: 55 dBµV PK 120kHz, 1m
	Immunity of ESAs to electromagnetic radiation ALSE: ISO 11452-2:2004 BCI: ISO 11452-4:2011 (Stripline and TEM alternative test methods)	General 20 MHz ... 1000 MHz 20 MHz ... 1000 MHz: AM BCI: 20 MHz ... 400 MHz, 48 mA (substitution, 150 mm, 450 mm, 750 mm) Antenne, ALSE (hor/ver) 200 MHz ... 1000 MHz, 24 V/m, AM
	ESD - Component immunity test method (Powered-up test) - direct discharges	330 Ω / 330 pF, 330 Ω / 150 pF, Level I: contact: ±2 kV, ±4 kV Level I: air: ±2 kV, ±4 kV
	ESD - Component immunity test method (Powered-up test) - indirect discharges	330 Ω / 330 pF, 330 Ω / 150 pF, Level I: contact: ±2 kV, ±4 kV Level I: air: ±2 kV, ±4 kV
	Conducted transient emission from ESAs on 12 V supply lines ISO 7637-2:2004	Pos: +75 V Neg: -100 V

Agricultural and forestry machines (EMC tests) - ISO 14982

Standard	Test	Parameter
	Conducted transient emission from ESAs on 24 V supply lines ISO 7637-2:2004	Pos: +150 V Neg: -450 V
	Electrical transient conduction along supply lines 12 V System ISO 7637-2:2004	Pulse 1 - 25 V, 5000 pulses t1 = 0,5s to 5s
		Pulse 2a 25 V, 5000 pulses t1 = 0,2s to 5s
		Pulse 3a -25 V, 1 hr
		Pulse 3b 25 V, 1 hr
		Pulse 4 Us = -4 V Ua = -2,5 V to -6 V 1 pulse
		Pulse 5a Us = 26,5 V, Ri = 4 Ohm, td = 400 ms, 1 pulse
	Electrical transient conduction along supply lines 24 V System, Level 3 ISO 7637-2:2004	Pulse 1 - 50 V, 5000 pulses t1 = 0,5s to 5s
		Pulse 2a 25 V, 5000 pulses t1 = 0,2s to 2s
		Pulse 3a -35 V, 1 hr

DETAILED QUALIFICATION

Agricultural and forestry machines (EMC tests) - ISO 14982

Standard	Test	Parameter
		Pulse 3b +35 V, 1 hr
		Pulse 4 Us = -5 V Ua = -5 V to -12 V 1 pulse
		Pulse 5a Us = 70 V, Ri = 8 Ohm, td = 350 ms, 1 pulse

STW company standard (EMC tests)

Standard	Test	Parameter
STW Company Standard	Radiated emission Cispr25:2016	0,15 MHz ... 2500 MHz CISPR Class 3
	Conducted emission CISPR25:2016	Power lines (Voltage method) - CISPR Class 3 Data lines (current probe method) - CISPR Class 2 150 kHz to 108 MHz
	Immunity of ESAs to electromagnetic radiation General: ISO 11452-1:2015 ALSE: ISO 11452-2:2019 BCI: ISO 11452-4:2020	General 1 MHz ... 3200 MHz 1 MHz ... 3200 MHz: CW 1 MHz ... 800 MHz: AM 800 MHz ... 3200 MHz: PM BCI: 1 MHz ... 400 MHz, Level IV (200 mA) (substitution (150 mm, 450 mm, 750 mm) or closed loop (900 mm) method allowed) Antenne, ALSE: 200 MHz ... 800 MHz, Level V (200 V/m), CW, AM 800 MHz ... 3200 MHz, Level V (200 V/m), CW, PM
	Conducted transient emission from ESAs on 12 V supply lines, Level 3 ISO 7637-2:2011	Slow+: +37 V Slow-: -75 V Fast+: +75 V Fast-: -112 V
	Conducted transient emission from ESAs on 24 V supply lines, Level 3 ISO 7637-2:2011	Slow+: +37 V Slow-: -150 V Fast+: +150 V Fast-: -150 V

DETAILED QUALIFICATION

STW company standard (EMC tests)

Standard	Test	Parameter
	Electrical transient conduction along supply lines - 12 V System, Level 4 ISO 7637-2: 2011	Pulse 1 -150 V, 500 pulses t1 ≥ 0,5s
		Pulse 2a +112 V, 500 pulses t1 = 0,2s to 5s
		Pulse 2b +10 V, 10 pulses td = 0,2s to 2s
		Pulse 3a -220 V, 1h
		Pulse 3b +150 V, 1h
	Electrical transient conduction along supply lines - 24 V System, Level 4 ISO 7637-2: 2011	Pulse 1 -600 V, 500 pulses t1 ≥ 0,5s
		Pulse 2a +112 V, 500 pulses t1 = 0,2s to 5s
		Pulse 2b +20 V, 10 pulses td = 0,2s to 2s
		Pulse 3a -300 V, 1h
		Pulse 3b +300 V, 1h
	Faults on data lines; 12 V system, Level 4	Slow +: ICC, +6 V, 5 min, t1 = 0,2s to 5s

STW company standard (EMC tests)

Standard	Test	Parameter
		Slow -: ICC, -6 V, 5 min, t1 = 0,2s to 5s Pulse 3a: CCC, -110 V, 10 min Pulse 3b: CCC, +75 V, 10 min
	Faults on data lines; 24 V system, Level 4	Slow +: ICC, +10 V, 5 min, t1 = 0,2s to 5s Slow -: ICC, -10 V, 5 min, t1 = 0,2s to 5s Pulse 3a: CCC, -150 V, 10 min Pulse 3b: CCC, +150 V, 10 min
	ESD - Component immunity test method (Powered-up test) - direct discharges	330 Ω / 330 pF, 330 Ω / 150 pF Contact: ±2 kV, ±4 kV ± 8 kV Air: ±8 kV, ± 15 kV, ± 25 kV
	ESD - Component immunity test method (Powered-up test) - indirect discharges	330 Ω / 330 pF, 330 Ω / 150 pF Contact: ±2 kV, ±4 kV ± 8 kV
	ESD - Packaging and handling (Unpowered test)	2000 Ohm / 150 pF Contact: ±2 kV, ±4 kV ± 8 kV Air: ±4 kV, ±8 kV, ± 15 kV

DETAILED QUALIFICATION

STW company standard (electrical loads)

Standard	Test	Parameter
STW Company Standard	Overvoltage / Undervoltage / Switch-on hysteresis	**1st:** Decrease supply voltage from Umin in steps of 0.1 V until all outputs turned off. The determined voltage is called switch-off voltage. Increase supply voltage in steps of 0.1 V. The voltage where the device is running again in normal operating mode is the determined switch-on voltage. The difference between switch-off voltage and switch-on voltage is the hysteresis. Operate the device below Umin. Duration: 5 minutes. **2nd**: Overvoltage: Operate the device with maximum 3 % above Umax (32,96 V). Duration: 5 minutes
	Short circuit strength of signal and communication lines	Case 1: Short circuit test of each type of Input and Output (CIN, VIN, DIN, FIN, PWM, DOUT ...) against GND and UB at Umax and Umin for a duration of 1 minute. Case 2: Short circuit test of PWM outputs and digital outputs to low resistance loads against GND for a duration of 1 minute. Resitance loads - 0,1 Ω (±0,05), 0,5 Ω (±0,2), 1,0 Ω (±0,2) and 1,5 Ω (±0,2) Case 1 test scenario is covered under Standard ISO16750-2
	Start test	Supply lines are disconnected, GND is connected. Then connect one input and if available one low-side output to UB Duration: 5 Min.
	Load test	48 hrs. at Tmin: 12 hrs. OM 2.1 - from the 13th hour OM 3.2 at Umin & Imax. 48 hrs. at Tmax: OM 3.2 at Umax and Imax Duration: 4 days
	Life-time (Operation)	Test temperature: +95 °C Test duration: 920 hrs. O.M. 3.2 with loaded condition Test temperature is set to 10 °C more than maximum operational temperature (Tmax) to reduce the test duration.
	Slow decrease and increase of supply voltage	Decrease supply voltage from Usmax to 0 V and increase it from 0 V to Usmax. Applying a change rate of (0.5 ± 0.1)V per minute

DETAILED QUALIFICATION

STW company standard (environmental qualification)

Standard	Test	Parameter
STW Company Standard	Vibration (sinusoidal) DIN EN 60068-2-6:2008	10 ... 2000 Hz: 5g 1 oct/min, 3 axis, 10 cycles, bidirectional
	Bump DIN EN 60068-2-27:2010	Acceleration: 30 g Time: 6 ms Half-sine, 500 shocks/direction